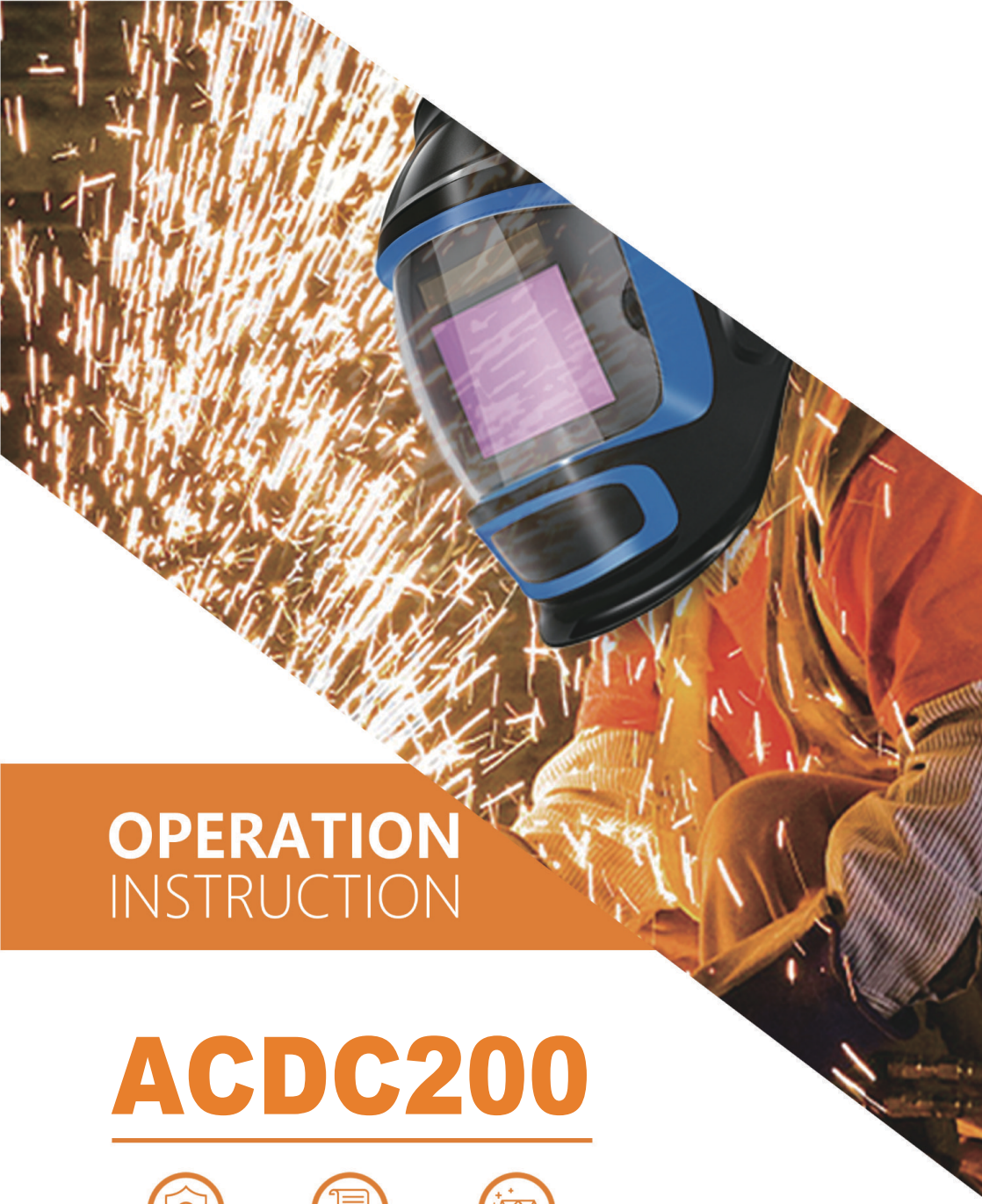

# OPERATION INSTRUCTION

# ACDC200

SAFETY PROFESSION QUALITY

NGEN
EMPOWERING FUTURE

# Dear Customer

Thank you very much for being our valued customer. The welders are built from high-quality components, and each machine passes a number of industry-leading lab tests to provide a superior welding experience and performance. For your safety, please read and understand this manual carefully before using this product. Your satisfaction is our top priority! If you have any questions or concerns, please feel free to contact NGEN for support:

**info@ngen-global.com**

# TABLE OF CONTENTS


01 SAFETY 3
02 SYMBOL EXPLANATION 4
03 PRODUCT OVERVIEW 5
04 FUNCTION OVERVIEW 5
05 PERFORMANCE CHARACTERISTICS 6
06 OUTPUT VOLT-AMPERE CHARACTERI 7
07 TECHNICAL PARAMETERS 8
08 ELECTRICAL SCHEMATIC DIAGRAM 9
09 OPERATION DESCRIPTION 10
10 INSTALLATION & OPERATION 18
11 CAUTION 20
12 OPTIONAL ACCESS OPERATION DESCRIPTION 20
13 MAINTENANCE 22
14 TROUBLESHOOTING 22

# 1. SAFETY

Welding may result in injury to you and others, so please implement protection during welding. See more details in Safety Protection Guidebook for Operator which meets the requirements to manufactures on accident prevention.



**Operate this equipment by trained professional only!**

- Use welding labor protection supplies with approval of safety supervisory authority.
- Operators must be the special workers with valid work permits of “Metal Welding (Gas Cutting) Operation”.
- Do not maintain and repair welder with power.



**Electric shock-may result in serious injury or even death!**

- Install grounding device according to application standard.
- Do not touch live parts with naked skin, wet gloves or wet clothes.
- Be sure you are insulated from ground and workpiece.
- Confirm the safety of your working position.



**Smoke-may be harmful to your health!**

- Keep your head away from the smoke to avoid inhalation of waste gas in welding.
- Keep the working environment well ventilated with exhaust or ventilation equipment when welding.



**Arc radiation-may hurt your eyes and burn your skin!**

- Use proper welding mask and wear protective clothing to protect your eyes and body.
- Use proper mask or curtain to protect onlooker from being injured.



**Improper use and operation may result in fire or explosion**

- Welding spark may result in fire, so please make ensure there are no inflammables near the welding position, and pay attention to fire safety.
- Ensure there is fire extinguisher nearby, and make ure someone has been trained to operate the fire extinguisher.
- Do not weld closed container.
- Do not use this machine for pipe thawing.



**Hot workpiece can cause severe scald.**

- Do not touch hot workpiece with bare hands.
- Cool the welding torch for a while after continuously working.



**Excessive noise does great harm to people’s hearing.**

- Wear ear covers or other hearing protectors when welding.
- Give warning to onlooker that noise may be potentially hazardous to hearing.



**Magnetic field can make cardiac pacemaker a bit wonky.**

- People with cardiac pacemaker should stay away from the welding spot without first talking to a doctor.



**Moving parts may injure your body.**

- Please keep away from moving parts (like fan).
- Each door, panel, cover, baffle plate, and protective device the like should be closed and located correctly.



**Seek professional support when trouble strikes.**

- When trouble strikes in installation and operation, please inspect according to related contents in this manual.

## 2. SYMBOL EXPLANATION




Cautions in operation



MMA



Items need special instruction



Welding gas related parameters



It's forbidden to dispose electric waste together with other ordinary waste. Please take care of our environment.




Spot welding time



Power on




Pulse Frequency



Power off




Pulse Width



Ground connection




AC Frequency




Rotary knobs allow for key-push operation



AC Balance



Remote control mode or torch control mode




Current Unit



Diameter of Tungsten needles or electrodes




Time Unit

Parameters setting warning

Balance Unit or Pulse Width Unit

TIG

AC Frequency or Pulse Frequency Unit

Arc Force

## 3. PRODUCT OVERVIEW

**TIG200P ACDC** is numerical controlled inverter AC DC welder of advanced technologies, multiple functions and excellent performance. Equipped with **AC square wave argon arc welding, AC pulse argon arc welding, DC argon arc welding, DC pulse argon arc welding, DC fluxcoated electrodes MMA, and argon arc spot welding (DC, pulse or AC)**, and it's widely applied for various metal materials' delicate welding. The integration of unique electric structure with air channel design in **TIG200P ACDC** series can speed up the heat dissipation of the power device, so that to improve duty cycle. The unique air channel heat dissipation efficiency can effectively prevent damages for the power devices and control circuits resulted from the dust absorbed by the fan, and greatly improve welder's reliability.

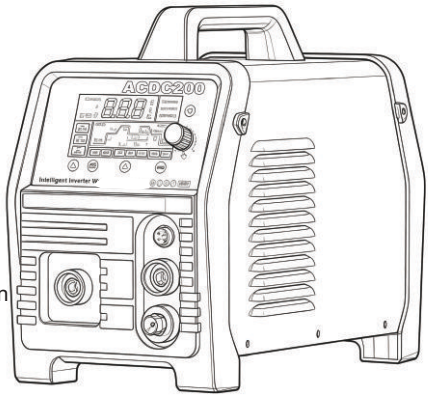


The overall streamline design perfectly integrates front and back panels, forming the most coherent and naturally joints of the machine. The front panel and the rear panel are coated with **rubber oil** to achieve soft texture, fine hand feeling, and warm and pleasant appearance. Optimized welding performance, integration of various welding functions, combination of high efficiency with small size, lightweight, low cost makes it suitable for both heavy industries and open field operation. No matter you are a experienced welding operator or newly started operators, **TIG200P ACDC** would be your most convenient choice to meet your requirements for various industries and fields.

**Not applicable to all products. There might be differences among different machines based on different customer requirements.**

## 4.FUNCTION OVERVIEW

Multi Functions Design

- Multiple welding modes and torch control modes; pedal remoter and welding torch remote control are available;
- Real time display of welding current: convenient display of welding output status.
- MMA hot start function: easier and more reliable MMA arc start
- VRD(optional): to ensure operator's safety while in idle mode
- Anti-sticking(optional ): lower the machine's working intensity
- Self-adjustable arc force current: ensure well operation while under long-distance welding.
- HF arc start: built-in pressurized arc ignition circuit; also applicable to TIG no-HF arc ignition.
- Fan intelligent temperature control: prolong the fan's lifespan.
- Auto saving of welding parameters while power off; auto recovery of last time's welding parameters.

## 5. PERFORMANCE CHARACTERISTICS

**IGBT inverter technology**

- The adoption of inverting frequency and strong shock resistance IGBT for main loop contributes to smaller welder size and lighter weight, and higher reliability.
- Great reduction in copper and core loss greatly enhances the welding efficiency and saves energy.
- Switching frequency is beyond audio frequency, which almost eliminates noise pollution.

**Advanced Inverter control technique**

- Advanced control scheme caters for various welding process requirements and greatly enhances welder performances.
- New control technology contributes to a smaller voltage spike which is caused by second inversion, thus higher reliability and efficiency as well as smaller size.
- The adoption of MCU intelligent digital control technology and software digital controlled core welding functions bring upgraded performances when compared with traditional welders.
- Applicable to various acid and basic electrodes with a diameter of 1.6mm~4.0mm.
- Easy arc starting, less spatter, stable current and good shaping.

**Nice shape and structure design**

- Streamline design for front and rear panels to achieve a better integral shape.
- Panels made of high intensity engineering plastics guarantee high work efficiency in case of strong impact and drop or other harsh conditions.
- Excellent insulating property.
- Three proofing design; fine antistatic and anticorrosion performance.

**Optimized auto protection**

- TIG200P ACDC is of optimized auto protection function. When there is large scale voltage fluctuation, welder will shut off automatically and display the failure information; welder will restart when network voltage is stable. Welder will shut off in case of overcurrent, over-heat, or other abnormities, and display the according failure information. Multi protections largely prolong welder's lifespan.

**Excellent consistency and performance**

- This product adopts intelligent digital control technology which is not sensitive to component's parameters' change; certain components' changes won't affect welder's performances. It's also insensitive to temperature and humidity. All the above contributes to better consistency and performances when compared with traditional welders.

**Friendly interaction interface**

- This welder adopts international diagram form display, which is easy to understand and convenient to achieve accurate operation for different types of users.

**Capable of high quality MMA welding**

- The adoption excellent control algorithm largely improve MMA welding performance, bringing easy arc start, stable current, minimum spatter, no sticking, good shaping and self adaption to different cable length and cross-section.

**Capable of highly demanding argon arc welding**

- Optimized digital CC adjustment technology guarantees low noise and stable arc; meanwhile accurate control technology provides convenient operation for welding current. This welder is capable of 2T/4T/spot welding to meet various welding process demands.

**Remote control is available**

- This welder is capable of pedal remote control, allowing operator's control on real time welding current even further than **3** m.**(The foot pedal need to purchase separately)**

**Perfect auto memory**

- This welder can automatically save accumulated starting up time, accumulated power-on time, accumulated welding time, accumulated argon arc welding time, accumulated MMA welding time, accumulated alarm time, accumulated over-heat time, accumulated undervoltage time, accumulated over-voltage time, etc. to FLASH memorizer so that to provide data for possible maintenance.

## 6. OUTPUT VOLT-AMPERE CHARACTERISTICS

This welder is of CC output characteristics. The volt-ampere characteristic shows max output voltage and max output current. All other welding parameters are within the curve range. Please note the volt-ampere characteristics curves of various welding modes in below.

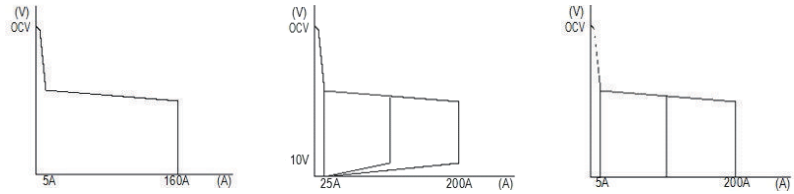


MMA Lift Arc HF Arc Start

Volt-ampere Characteristics Curve

**Note: Lift arc is not a standard function but instead is depending on customer's actual requirements.**

## 7. TECHNICAL PARAMETERS

| Model | | ACDC 200 | |
|---|---|---|---|
| Supply voltage(VAC) | | 110/220 | 220 |
| Input frequency(Hz) | | 50/60 | |
| Ated current (A) | | 37 | |
| Power capacity(KVA) | | 8.1 | |
| Rated output current(A) | MMA | 110V:120A;220V:160A | |
| | TIG | 110V:140A;220V:200A | |
| Output current range | MMA | 110V:20-120;220V:20-160 | |
| | TIG | 110V:10-140;220V:10-200 | |
| Arc force current range (A) | | 0-100 | |
| Spot welding time(s) | | 0.1-10 | |
| No load voltage | With VRD | 16V | |
| | Without VRD | 56V | |
| Pre-flow time(s) | | 0.1-5 | |
| Up-slope time(s) | | 0-10 | |
| Initial current (A) | | 10-100 | |
| AC output frequency(Hz) | | 30~100 | |
| Balance(%) | | 15-50 | |
| Down-slope time(S) | | 0-15 | |
| Post- flow time(S) | | 0.5-15 | |
| Background current | | (10-100)% | |
| Pulse frequency(Hz) | | 0.2~200 | |
| Pulse width(%) | 0.2Hz~9.9Hz | 1~99 | |
| | 10Hz~200Hz | 01 ~90 | |
| Remote control | | Yes | |
| Arc start | | - | |
| Efficiency (%) | | 85 | |
| Duty circle(%) | | 40% | |
| Insulation grade | | F | |
| Enclosure protection class | | IP21S | |

## 8. ELECTRICAL SCHEMATIC DIAGRAM

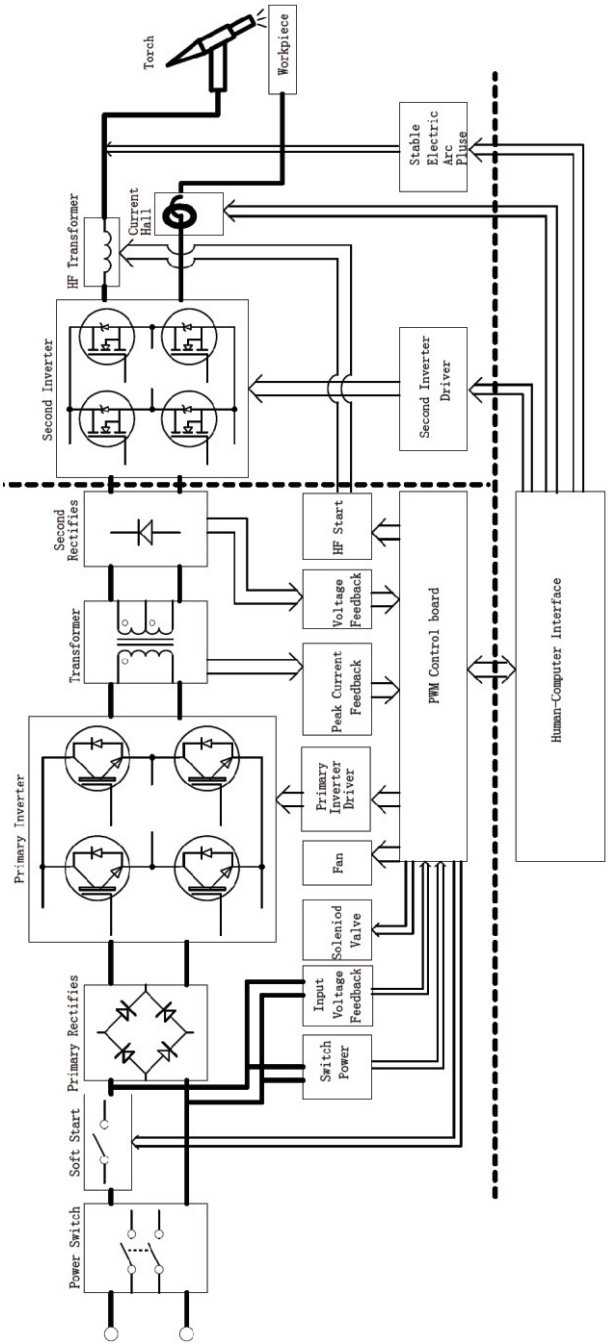

# 9. OPERATION DESCRIPTION

## 9.1 Machine appearance description

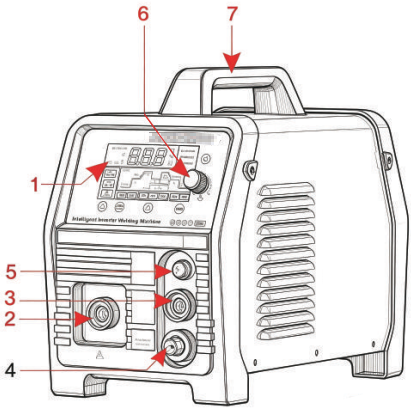


**1.Operation panel:** function selection and parameters setting
**2.Positive output terminal:** to connect holder clamp or earth clamp
**3.Negative output terminal:** to connect earth clamp or welding torch
**4.Argon gas connector**
**5.Torch switch aviation socket**
**6.Welding current adjusting knob: to adjust output current**
**7.Handle**

## 9.2 Panel description

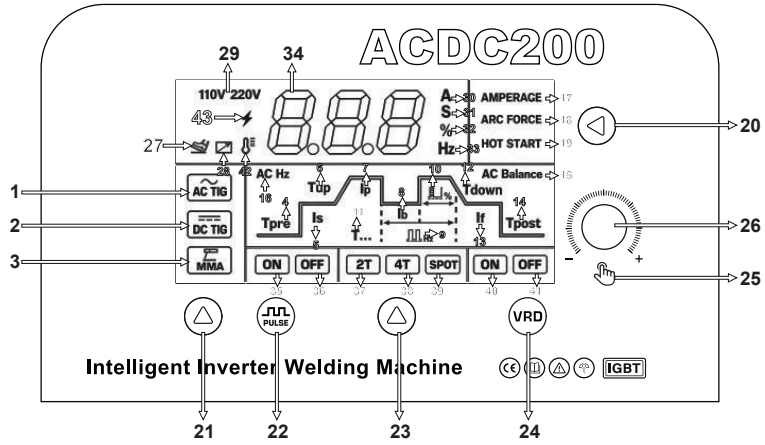


1.TIG/AC mode
2. TIG/DC mode
3. MMA manual welding mode
4. Pre Gas 0.1-5s feeding time in any mode of TIG, the adjustable range is 0.1-5s.
5. Initial current Set the arc current in TIG/4T mode, the adjustable range is 10-160A.
6. Slope Up Setting of peak current in TIG mode, the adjustment range is 0.1-5S.
7. TIG peak current The main current, adjustable range AC/110V, digital display TIG/10A-160A. AC/220V, digital display TIG/10A-200A, actual TIG/10A-180A.
8. Base value current Base value current during TIG pulse, adjustable range is 10%-100% of peak current.

9. Pulse Frequency Adjust the pulse frequency in TIG pulse mode
10. Pulse Duty Cycle Adjust the pulse duty cycle in TIG pulse mode
11. Spot welding time Adjust the spot welding time in TIG spot welding mode, the adjustment range is 0.1-10S.
12. Downhill time Adjust the slow down time of peak current in TIG mode, the adjustable range is 0.0-15S.
13. Arc closing current The arc closing current in TIG/4T mode is adjustable from 10-200A of the peak current.
14. Post Gas In TIG mode Post Gas supply time, the adjustment range is 0.5-15S
15. AC cleaning width, adjust the AC cleaning width in TIG/AC mode
16. AC frequency, adjust the output frequency of AC in TIG/AC mode
17. MMA current adjustment range AC/110V, digital display MMA/20A-140A; AC/220V, digital display MMA/20A-200A.
18. MMA arc thrust, in MMA mode to adjust the arc thrust Adjustable range of current 0-40A
19. MMA Hot Arcing, adjust the hot arcing in MMA mode, the adjusting range is 10-140A of the peak current.
20. Select 17-19 functions
21. Select 1-3 function
22. Select 35-36 function
23. Select function 37-39
24. Select 40-41 function
25. 4-16 function parameter cycle selection button, touch this encoder to select 4-16 parameter selection
26. 4-16 function parameter size knob Turn this encoder left or right to adjust the size of 4-16 parameters.
27-28. Automatic recognition of the foot pedal control mode The light is on to indicate that the foot pedal is turned on.
29. Input voltage AC110V/AC220V indication
30. Current unit ampere
31. Time unit seconds
32. Current unit Percentage
33. Frequency unit Hz
34. Adjustment parameter display and abnormal alarm display：E-01 for overheat protection；E-02 for undervoltage protection；E-04 for internal circuit fault
35. TIG pulse on
36. TIG pulse off
37. TIG/2T
38. TIG/4T
39. TIG/Spot Welding
40. MMA/VRD On
41. MMA/VRD Off
42. Abnormal Indicator
43. Power Indicator

**Note: Due to the continuous iterative updating of the software, the interface features may change, please refer to the actual use of the situation shall prevail. Thank you for your support.**

### 9.3.3 Welding Parameters Setting

Press rotary encoder potentiometerto 

adjust welding parameters based on actual demands. The parameters' setting can be done during no load or in the middle of welding without affecting welding.

| Welding mode | Torch switch mode | Pre-flow | Initial current | Up slope time | Peak current | Background current | AC frequency | Balance |
|---|---|---|---|---|---|---|---|---|
| MMA | NO | × | × | × | ● | × | × | × |
| DC TIG | 2T | ● | ● | ● | ● | × | × | × |
| | 4T | ● | ● | ● | ● | × | × | × |
| | Spot welding | ● | ● | ● | ● | × | × | × |
| DC Pulse TIG | 2T | ● | ● | ● | ● | ● | × | × |
| | 4T | ● | ● | ● | ● | ● | × | × |
| | Spot welding | ● | ● | ● | ● | ● | × | × |
| AC TIG | 2T | ● | ● | ● | ● | × | ● | ● |
| | 4T | ● | ● | ● | ● | × | ● | ● |
| | Spot welding | ● | ● | ● | ● | × | ● | ● |
| AC Pulse TIG | 2T | ● | ● | ● | ● | ● | ● | ● |
| | 4T | ● | ● | ● | ● | ● | ● | ● |
| | Spot welding | ● | ● | ● | ● | ● | ● | ● |
| Adjusting direction | | → | | | | | | |

| Welding mode | Torch switch mode | Pulse frequency | Pulse width | Down slope time | Pilot arc current | Post-flow | Arc force current | Spot welding time | Tungsten electrodes or electrodes selection |
|---|---|---|---|---|---|---|---|---|---|
| MMA | NO | × | × | × | × | × | ● | × | ● |
| DC TIG | 2T | × | × | ● | ● | ● | × | × | ● |
| | 4T | × | × | ● | ● | ● | × | × | ● |
| | Spot welding | × | × | ● | ● | ● | × | ● | ● |
| DC Pulse TIG | 2T | ● | ● | ● | ● | ● | × | × | ● |
| | 4T | ● | ● | ● | ● | ● | × | × | ● |
| | Spot welding | ● | ● | ● | ● | ● | × | ● | ● |

| | | | | | | | | | |
|---|---|---|---|---|---|---|---|---|---|
| AC TIG | 2T | × | × | ● | ● | ● | × | × | ● |
| | 4T | × | × | ● | ● | ● | × | × | ● |
| | Spot welding | × | × | ● | ● | ● | × | ● | ● |
| AC Pulse TIG | 2T | ● | ● | ● | ● | ● | × | × | ● |
| | 4T | ● | ● | ● | ● | ● | × | × | ● |
| | Spot welding | ● | ● | ● | ● | ● | × | ● | ● |
| Adjusting direction | | | | | | | | | |

**Notes:**

1. **● means available, × means null.**
2. **If the indicator is not in peak current and stop spinning rotary knob, it will go back to peak current position after 10 seconds.**
3. **When switch welding modes, if part of parameters are the same, then there is no need to change the parameters during adjustment and these parameters will change automatically due to different mode's condition limits.**

## 9.4 Welding Mode Description

### 9.4.1 MMA

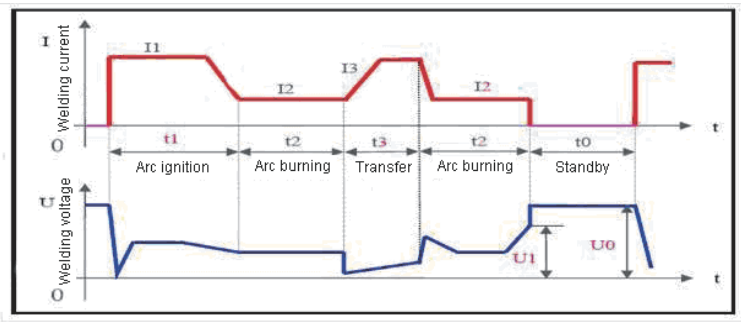


Current and Voltage Change during MMA

**Note:**

t0—Standby: No welding current; output voltage is the no-load voltage.

t1—Arc ignition: Welding current is arc ignition current (I1).

t2—Arc burning: Welding current is the preset current (I2).

t3—Short-circuit transfer: Welding current is the short-circuit transfer current (I3).

In MMA mode, 4 parameters that can be adjusted directly and 1 parameter that can only be adjusted through programming are available for this machine. Describe them as below.

- **Current (I2):** This is the welding current when arc is burning, and users can set it according to their own technical requirements.
- **Arc force:** It refers to the ascending slope of the current in short circuit, and it is set as the amperage increased per millisecond in this machine. The current will ascend from the preset value by this slope after short circuit occurs. (E.g. When the preset current is 100A and the arc force is 20, the current will be 200A 5ms after short circuit occurs.) If

it is still under short circuit when the current increases to the allowable maximum value 250A, the current will not ascend any more. If the short circuit status lasts for 0.8s or more, the machine will enter into electrode sticking process: to wait the disconnection of the electrode under low current. Arc force should be set according to the electrode diameter, preset current and the technical requirement. If the arc force is big, the molten drop can be transferred quickly, and electrode sticking seldom occurs. However, too big arc force may lead to excessive spatter. If the arc force is small, there will be little spatter, and the weld bead will be shaped well. However, too small arc force may lead to soft arc and electrode sticking. Therefore, the arc force should be increased when welding with thick electrode under low current. In general welding, the arc force may be set at 5~50.

- **Arc ignition current (I1) and arc ignition time (T1):** Arc ignition current is the output current of the machine when the arc is ignited. Arc ignition time is the time that the arc ignition current lasts. When in non-contact ignition mode, neither parameter makes sense. When in high current ignition mode, the arc ignition current is generally 1.5~3 times the welding current, and the arc ignition time is 0.02~0.05s. When in low current ignition mode, the arc ignition current is generally 0.2~0.5 times the welding current, and the arc ignition time is 0.02~0.1s.

| Operation hints | Arc ignition modes in MMA |
|---|---|

- **Low current arc ignition:** This can be also called lift/soft arc ignition. Set the arc ignition current (I1) to be a value lower than I2 and the machine will enter into low current arc ignition mode. Touch the workpiece with the electrode, and lift the electrode to the normal position to weld after arc is ignited.
- **High current arc ignition:** This can be also called contact/thermal arc ignition. Set the arc ignition current (I1) to be a value not lower than I2 and the machine will enter into high current arc ignition mode. Touch the workpiece with the electrode, and normal welding can be carried out without lifting the electrode.

- **Electrode Selection. See details in Table 9-1**

Table 9-1 MMA Process Specification Reference Table

| Electrode Dia (mm) | Recommended Welding Current(A) |
|---|---|
| 1.6 | 30~60 |
| 2.0 | 50~90 |
| 2.5 | 80~120 |
| 3.2 | 100~140 |
| 4.0 | 140~250 |

### 9.4.2 DC TIG welding

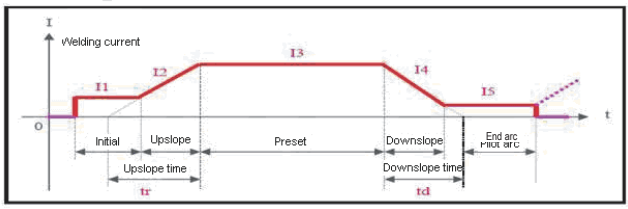


DC TIG Current Change Waveform

In DC TIG mode, 4 adjustable parameters are available for this machine. Describe them as below.

- **Current (I3):** This parameter can be set according to users' own technical requirements.
- **Initial current (I1):** It is the current when arc is ignited by pushing the torch trigger, and it should be set according to users' own technical requirements. If the initial current is high enough, arc is easier to ignite. However, it should not be too high when welding thin plate, so as to avoid burn through the workpiece during arc ignition. In some operation modes, the current does not rise but stay at the initial current value to preheat the workpiece or illuminate.
- **Pilot arc current (I5):** In some operation modes, the arc does not stop after current downslope but stay in the pilot arc state. The working current in this state is called pilot arc current, and it should be set according to users' technical requirements.
- **Pre-flow time:** It indicates the time from the torch trigger being pushed to arc being ignited in non-contact mode. Commonly it should be longer than 0.5s to make sure that the gas has been delivered to the welding torch in normal flow before arc ignition. The pre-flow time should be increased if the gas hose is long.

In AC square wave TIG welding, the pre-flow time and post-flow time are the same with those in DC TIG welding, and others are described as below.

- **Initial current (I0), welding current (I1) & pilot arc current (I2):** The preset value of the three parameters is approximately the absolute average of the practical welding current, and can be adjusted according to user's technical requirements.
- **Pulse frequency (1/tp):** It can be adjusted according to users' technical requirements.
- **Cleaning strength (100%*Tc/Tp):** Generally, in AC welding, when taking the electrode as anode, the current is called cathode current. Its main function is to break up the oxidized layer of the workpiece, and the cleaning strength is the percentage cathode current holding in the AC period. This parameter is 10~40% commonly. When the value is smaller, arc is concentrative, molten pool is narrow and deep, and when it is bigger, arc is dispersive, molten pool is wide and shallow.

### 9.4.5 AC pulsed TIG welding

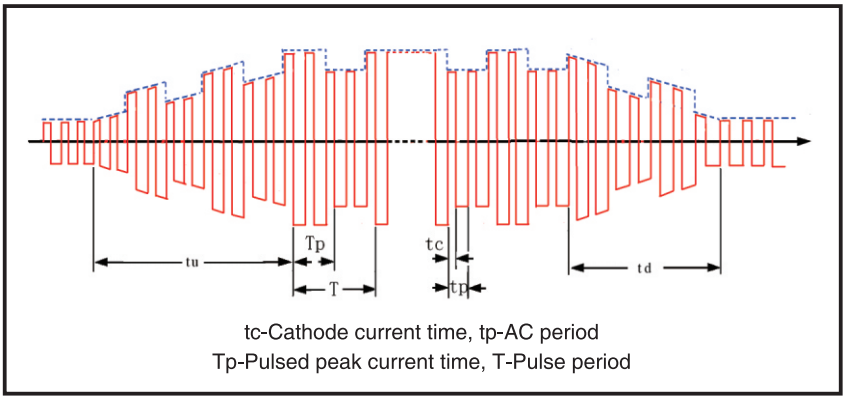


tc-Cathode current time, tp-AC period
Tp-Pulsed peak current time, T-Pulse period

AC Pulse TIG Current Change Waveform

AC pulsed TIG welding is almost the same as AC square wave TIG welding, and what makes them different is that in AC pulsed TIG welding, the welding current varies with the pulse and peak current and base current are generated because the welding current is controlled by a low frequency pulse. The preset peak current and base current are the low frequency pulse peak value (average value) and base value (average value) respectively. For the AC square wave parameter selecting and setting, please refer to the corresponding contents in AC square wave TIG welding. For the pulse frequency and pulse duration ratio, users may refer to the corresponding contents in DC pulsed TIG welding. The pulse frequency (1/T) is a little low, and it can be adjusted between 0.5Hz and 5Hz. The pulse duration ratio (Tp/T) can be adjusted between 10% and 90%.

## 9.5 TIG operation mode

TIG operation mode is a kind of special stipulation, which stipulates the modes to control welding current through different operation of the torch trigger in TIG (DC TIG, pulsed TIG and AC TIG) welding. The introduction of TIG operation mode strengthens the application of remote control function of the torch trigger, so that users can get practical remote controls for welding machines without further investment.

TIG operation mode should be selected according to users' technical requirements and operating habits. All the TIG operation modes for this machine are listed in the table *TIG operation modes* below.

| Torch trigger operation notes | | | |
|---|---|---|---|
| ↓ | Push the torch trigger. | ↑ | Release the torch trigger. |
| ↓↑ | Push the torch trigger and then release it at any time. | ↑↓ | Release the torch trigger and then push it at any time. |

TIG operation modes

| Mode no. | Operation | Torch trigger operation and current curve |
|---|---|---|
| 1 | **Spot welding mode:**<br>① Push the torch trigger: arc is ignited and current rises to the preset value.<br>② When the spot welding time is up, current drops gradually, and arc stops.<br>Note: Spot welding time is 1/10 of the upslope time. |  |

- **Post-flow time:** It indicates the time from the welding current being cut off to the gas valve inside the machine being closed. If it is too long, it will lead to a waste of argon gas; if it is too short, it will result in the oxidation of weld bead. When in AC TIG or for special materials, the time should be longer.
- **Upslope time (tr):** It indicates the time spent on current rising from 0 to the preset value, and it should be set according to users' technical requirements.
- **Downslope time (td):** It indicates the time spent on current dropping from the preset value to 0, and it should be set according to users' technical requirements.
- **Tungsten Electrodes Selection:** see details in Table 9-2

Table 9-2 TIG Process Specification Reference Table

| Electrode Dia (mm) | Recommended Welding Current(A) |
|---|---|
| 1.0 | 5~30 |
| 1.6 | 20~90 |
| 2.0 | 45~135 |
| 2.5 | 70~180 |
| 3.2 | 130~250 |

### 9.4.3 Pulsed TIG welding

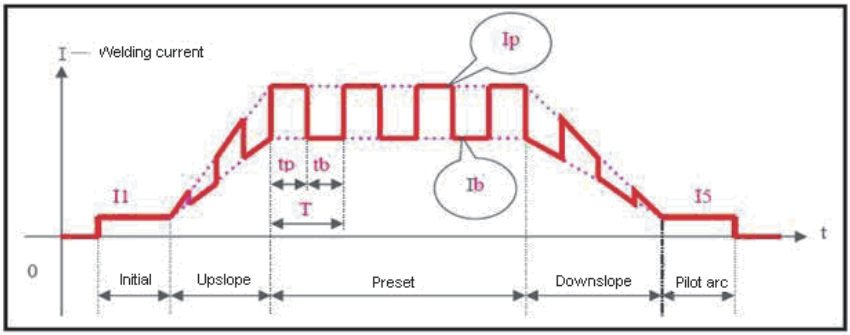


DC Pulse TIG Current Change Waveform

In pulsed TIG mode, all DC TIG parameters except current (I3) and another 4 adjustable parameters are available for this machine. Describe them as below.

- **Peak current (Ip):** It should be adjusted according to users' technical requirements.
- **Base current (Ib):** It should be adjusted according to users' technical requirements.
- **Pulse frequency (1/T):** T=Tp+Tb. It should be adjusted according to users' technical requirements.
- **Pulse duration ratio (100%*Tp/T):** The percentage peak current time holding in pulse period. It should be adjusted according to users' technical requirements.

| | | |
|---|---|---|
| **2** | Standard 4T mode:① Push the torch trigger: arc is ignited and current reaches the initial value.② Release it: current rises gradually.③ Push it again: current drops to pilot arc current value. |  |
| **3** | Standard 4T mode:① Push the torch trigger: arc is ignited and current reaches the initial value.② Release it: current rises gradually.③ Push it again: current drops to pilot arc current value. | 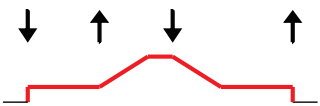 |

When reading the above table, please note:

- Whether arc ignited by HF or by striking the electrode, and no matter what kind of operation mode is selected, after arc is ignited successfully, it enters into initial current, and later into operational mode control.
- Some operation modes adopt the exit mode by pushing the torch trigger. The operator should release it after exiting welding. In this way, another welding operation can be entered by pushing the torch trigger.

- Current curves in all operation modes are drawn on the assumption that the machine works in DC TIG mode. If the machine works in pulsed TIG mode, the current curve appears a pulse shape; if the machine works in AC TIG mode, the current curve appears a variable polarity pulse shape.
- Customarily, the TIG operation modes most widely used are 2T and 4T, which exactly correspond to operation mode 2 and 4 for this machine respectively.

## 10. INSTALLATION & OPERATION

Notice:

Please install the machine strictly according to the following steps.

Turn off the power supply before any electric connection operation.

IP21S enclosure protection grade, and please do not operate it in rain.

### 10.1 Installation

1) Please connect the primary power line to the according voltage class. Please make sure the power line is connected to the right voltage class.
2) Please make sure the primary source is in fine contact with the according power line terminal or socket and prevent oxidation.
3) Detect the input voltage with multimeter and make sure the values are in the fluctuation range.
4) Please insert the electrode holder cable plug into the front panel's lower right "+" socket, and screw tightly clockwise.
5) Please insert the earth clamp cable plug into the front panel's lower left "-"socket and screw tightly clockwise.
6) Please make sure the supply is in good ground condition.
   Generally, basic electrode adopt DC PC (with electrode being connected with positive polarity), and no special requirement for acid electrodes.

### 10.2 Operation

1) After the correct installation per above methods, please turn on the power switch("ON").While the power supply is "ON", the welder start to work normally with the indicator lighting up and fan working( fan working is determined by temperature and it may stop).
2) Please pay attention to the polarity while connecting. There are normally two types of wiring: NC(negative connection) and PC( positive connection). NC: welding holder connected to "-"and work piece to "+"; PC: workpiece to "-"and welding holder to "+". Please choose the proper connection according to different workpiece and processing method. Unstable arc, spatter, and electrode sticking could happen if improper wiring is selected. Please change the quick connect plug to change the polarity in case of above abnormal situation.
3) Please connect earth clamp to welder's "+" and torch connect to welder's "-"before TIG operation(as shown in "MMA Sketch Map"). No PC is permitted or else welding can not processed normally. Connect torch control cable to according connector and choose the proper welding mode per workpiece material and check if the Tungsten electrode is in match with panel's Tungsten electrode parameters and current parameters. When under AC welding mode, improper balance parameter may result in abnormal welding operation.

4) If the distance between workpiece and welder is long and the secondary line (holder cable and ground cable) are long, please choose cables with wide cross section so that to lower cable voltage drop.
Please preset current according to electrode specification, and clamp the electrode well. Welding can be started by short circuit arc ignition. Please refer to welding parameters in Table 9-2

**10.3 TIG Welding Torch**

**Standard**

**Torch model: WP-17** **Cooling type: Air**
**Max current: 200A** **Gas connector: M16×1.5**
**Rated current: 160A** **Rated duty circle: 60%**

Welding torch accessory

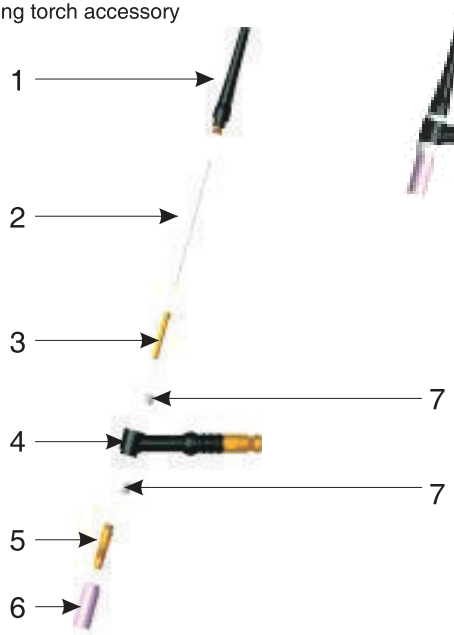


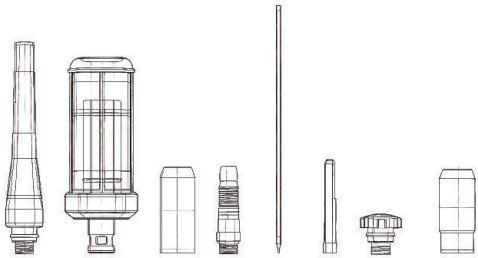

1. **Long handle cover**
2. **Tungsten needle**
3. **Tungsten electrode clamp**
4. **Torch head**
5. **Tungsten electrode diffusers**
6. **Ceramic nozzle**
7. **Spearhead insulation cover**

**Assemble the welding torch as shown above.**

# 11. CAUTION

### 11.1 Working Environment

1)Welding should be carried out in dry environment with humidity of 90% or less.
2)The working environment temperature should be between -10°C and 40°C.
3)Avoid welding in the open air unless sheltered from sunlight and rain. Keep welder dry .
4)Avoid welding in dusty area or environment with corrosive chemical gas.
5)Gas shielded arc welding should be operated in environment without strong airflow.

### 11.2 Safety Tips

Over-current/over-voltage/over-heating protection circuit is installed in this machine. When the network voltage, output current or inner temperature exceeds the setting standard, the machine will stop working automatically. However, excessive operation (over voltage) will lead to welder damage. Therefore, please note:

**1) Ventilation**

This is an industrial welding machine and can create large current that requires strict cooling devices instead of natural ventilation. Therefore the built-in two fans are very important to ensure effective cooling and stable working performance. The operator should make sure that the louvers be uncovered and unblocked. The minimum distance between the machine and nearby objects should be 30cm. Good ventilation is of critical importance to the normal performance and lifespan of the machine.

**2) Over-load is forbidden**

The welder is operated according to allowable duty circle (refer to the corresponding duty cycle). Make sure that the welding current should not exceed the max load current. Overload could obviously shorten the machine's lifespan, or even damage the machine.

**3) Over-voltage is forbidden**

Please refer to “Technical Parameters” for the power supply voltage range. This machine is of automatic voltage compensation to ensure the welding voltage is within the given range. In case that the input voltage exceeds the stipulated value, it would possibly damage the components of the machine. The operator should take according measures to this case.

**4) Reliable ground connection.**

There is an ground screw(with ground remark ) in the rear part of each machine. Connect it with an earth cable (section $\geq 6mm^2$) to avoid the static and electric shock.

**5)** A sudden halt may occur with the front panel’s red indicator lighting up while the machine is of over-load status. Under this circumstance, it is unnecessary to restart the machine for it’s resulted from over-heating, and the temperature control switch was triggered. Keep the built-in fans working to lower the machine’s temperature. Welding can be resumed when temperature falls into the standard range and the red indicator is off.

# 12. OPTIONAL ACCESS OPERATION DESCRIPTION

### 12.1 Pedal Remoter Operation

Pedal remoter control internal structure is composed by inching switch and sliding potentiometer, as shown in below Fig 12.1

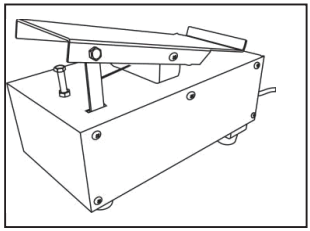

Fig **12.1** Pedal Remote Controller

Pedal controlling function is mainly used while it's under TIG mode.

- Connect the pedal remoter to the welder front panel pedal controller interface through dedicated cable. See Fig 12.2

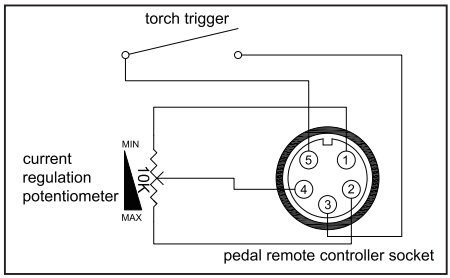


Fig 12.2

- Tread the pedal for 5 seconds while under idle load mode; the front panel remote control indicator will light up after 3 beeps. Release the pedal and enter the pedal remote control mode.
- The torch switch mode needs being set to 2T when using the pedal remote control function. Preset the max welding current through the front panel and start welding.
- Tread the pedal control and start arc ignition. Non-contact arc ignition is the most applied method. Welding current will be controlled by pedal remoter after successful arc ignition. Max output current is the preset current.

**Note: The pedal remote controller is optional. Please clarify your needs before placing orders.**

### 12.2 Wire-drive Welding Torch Operation

Wire-drive welding torch is usually applied while it's under TIG.

- Connect the wire-drive torch to the welder front panel pedal controller connection aviation socket through dedicated cable. See Fig below:

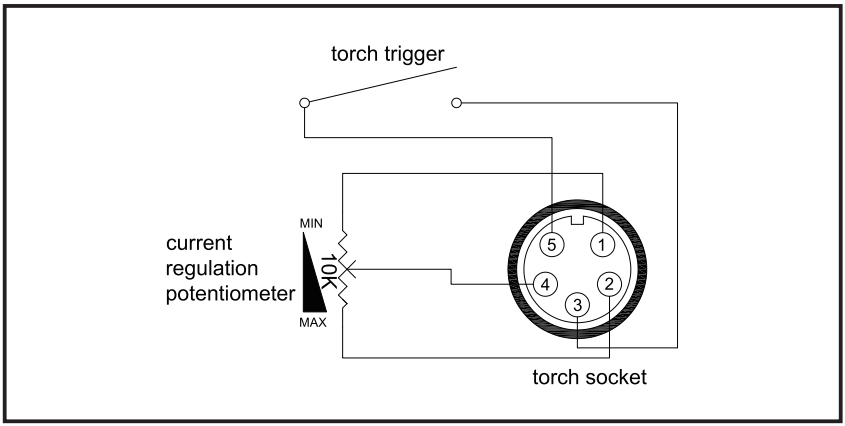


Fig **12.3**

- Push the torch switch for 5 seconds while under idle load mode; the front panel remote control indicator will light up after 3 beeps and enter the remote control mode.
- The torch switch mode needs being set to 4T when using analog regulation torch function. Preset the max welding current through front panel and start welding. The welding current can be adjusted through torch potentionmeter. The allowable max current is the preset peak current value.

## 13. MAINTENANCE




The following operation requires professional knowledge on electric application and comprehensive safety knowledge. Operators should be licensed with related qualification certificates (still in validation) which can prove their skills and knowledge. Make sure the power supply is cut off before uncovering the welding machine.

1. Check periodically whether inner circuit connection is in good condition (esp. plugs). Tighten the loose connection. If there is oxidization, remove it with sandpaper and then reconnect.
2. Keep hands, hair and tools away from the moving parts such as the fan to avoid personal injury or machine damage.
3. Clean the dust periodically with dry and clean compressed air. If welding environment with heavy smoke and pollution, the machine should be cleaned daily. The pressure of compressed air should be at a proper level in order to avoid the small parts inside the machine being damaged.
4. Avoid rain, water and vapor infiltrating the machine. If there is, dry it and check the insulation of the equipment (including that between the connections and that between the connection and the enclosure). Only when there are no abnormal phenomena any more, can the machine be used.
5. Check periodically whether the insulation cover of all cables is in good condition. If there is any dilapidation, rewrap it or replace it.
6. Put the machine into the original packing in dry location if it is not to be used for a long time.

## 14. TROUBLESHOOTING




The following operation requires professional knowledge on electric application and comprehensive safety knowledge. Operators should be licensed with related qualification certificates (still in validation) which can prove their skills and knowledge. Make sure the power supply is cut off before uncovering the welding machine.

### 14.1 Common Malfunction Analysis and Solution

The failures listed below may be related to your accessories, gas, working environment, power supply conditions. Please try to improve the above so that to avoid similar failures.

**Table 14-1 MMA common malfunction solutions**

| Malfunction phenomena | | Cause analysis | Solutions |
|---|---|---|---|
| Fan doesn't work or has abnormal revolving speed after power on | | Temperature is too low or fan is broken. | When the temperature is too low, please operate welder for a while and wait till the internal temperature is increased; if the fan is still not working, change the fan. |
| MMA | Difficult arc ignition | Low arc ignition current or short ignition time. | Adjust (increase) the arc ignition current and time. |
| | Over arc ignition or over-size molten pool | Ignition current is too big or ignition time is too long. | Adjust (decrease) the arc ignition current and time. |
| | Abnormal arc | Poor power cable connection | Make sure the well connection of power cable. |
| | Sticking electrode | Low arc force current | Adjust(increase) the arc force current |
| | Burning electrode holder | Electrode holder rated current is too low | Change a larger current electrode holder. |
| | Easy arc breaking | Network voltage is too low | Please operate when network voltage is back to normal. |

**Table 14-2 TIG common malfunction solutions**

| Malfunction phenomena | | Cause analysis | Solutions |
|---|---|---|---|
| Fan doesn't work or has abnormal revolving speed after power on | | Temperature is too low or fan is broken. | When the temperature is too low, please operate welder for a while and wait till the internal temperature is increased; if the fan is still not working, change the fan. |
| TIG | No output current when torch switch is on. | Some TIG function allows welding ending while torch switch is still on. | Release torch switch and restart welding. |
| | | Welding circuit disconnection | Check the circuit and reconnect |
| | When it's under HF arc ignition mode, no arc ignition when turn on the torch switch. | Poor connection of welding torch switch. | Reconnect and tighten the welding torch |
| | | Over-wide spark gap. | Adjust the spark gap (about 0.8mm) |
| | Over burning of tungsten electrode. | Reverse connection of welding torch and ground cable | Exchange the two plugs' position |
| | | Clearing intensity is too big | Decrease the clearing intensity |
| | Burning electrode holder | Electrode holder rated current is too low | 1. Make sure the argon cylinder valve is open and has enough pressure. If the internal pressure is lower than 0.5Mpa, please refill the gas.<br>2. Please check if the argon flow is normal or not. You may choose different flow according to different welding current. But under-volume gas flow may result in incomplete coverage of welding spot. We suggest the min argon flow of 5L/min no matter how small the welding current is.<br>3. Please make sure the well sealing of all gas circuit as well as gas purity.<br>4. Please check if there is strong airflow in the working environment. |

| | | | |
|---|---|---|---|
| | Difficult arc ignition, easy arc breaking | Poor quality tungsten electrode or severe oxidation of tungsten electrodes | 1.Change good quality tungsten electrodes<br>2.Remove the oxidation layer.<br>3.Prolong the post-flow time so that to avoid tungsten oxidation<br>4.Adjust the spark gap (around 0.8mm) |
| | Unstable welding current during welding | Big fluctuation of network voltage or poor connection with power grid.<br>Interference from other equipment | 1.Make sure the power grid is normal and well connection of power source connector.<br>2.Use different power cables for those severe interference equipments |

Please fix the welding failures timely. Only qualified personnel can fix welders; Disassemble or overhaul welders by disqualified personnel is prohibited, as it could cause serious danger or bigger damages to other critical components.

**This product is under continuous improvements; therefore, there might be differences in some respects except for functions and operation. Your understanding is much appreciated.**

**14.2 Alarm and Solutions (Table 14-3)**

**Table 14-3 Alarm and Solutions**

| Type | Alarm | Error code | Welder reaction | Reason | Solutions |
|---|---|---|---|---|---|
| Over-heat | Overheat indicator lights up and there is alarm sound | E - 1 | Temporary close of main circuit | Over-working of main circuit | Do not power off; restart welding when the overheat indicator stop lighting up. |
| Under-voltage | Display error code and there is alarm sound | E - 2 | Permanently close main circuit and need to restart the machine | Power grid under-voltage(lower than 160VAC) | Please shut off the welder and restart. If there is a continuous power grid undervoltage, please wait and restart welder when the power grid is back to normal. If power grid voltage is normal but with undervoltage warning, please contact professional maintenance personnel. |
| Abnormal internal circuit | Display error code and there is alarm sound | E - 4 | Permanently close main circuit | Load current is too big or main power device is under over-current protection. | Pleas restart welder. If the warning still remains, please contact professional maintenance personnel. |

# APPENDIX A: TRANSPORTATION AND STORAGE

**A1. Transportation**

Equipment should be handled with care in transportation to avoid severe impact. Equipment should be prevented from being affected with damp and caught in the rain in transportation.

**A2. Storage**

Temperature for storage: 40

Humidity for storage: relative humidity ≤ 90%

Storage life: 12 months

Place for storage: ventilated indoor place without corrosive gas

# APPENDIX B: WIRING DIAGRAM OF COMPLETE MACHINE

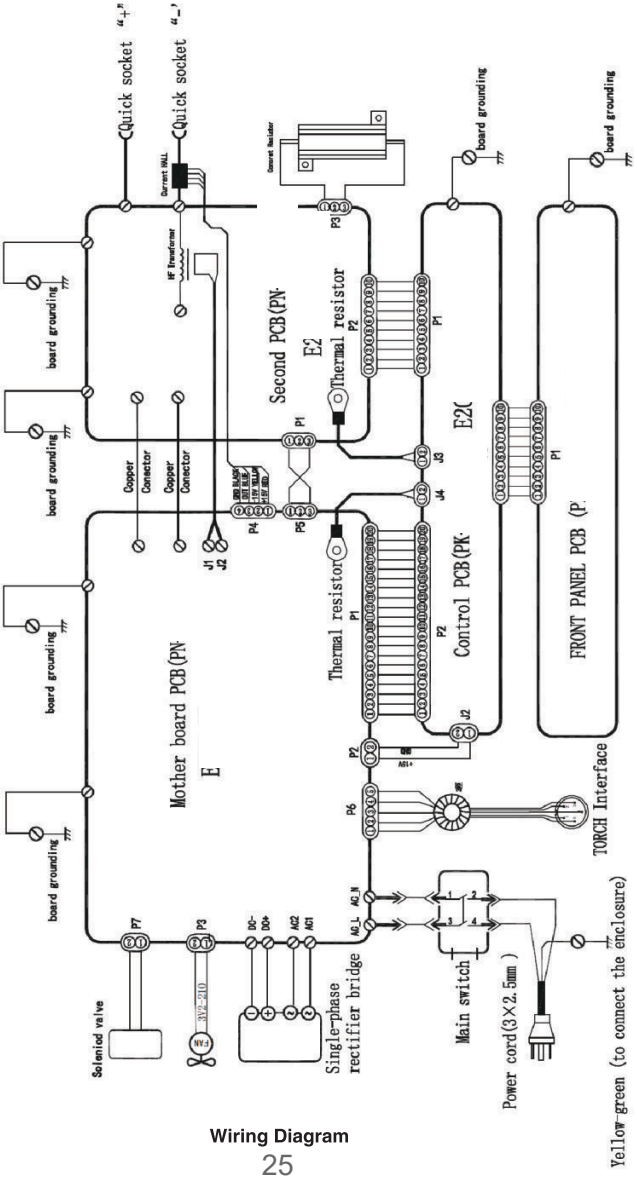


**Wiring Diagram**

EMPOWERING FUTURE

**NGEN INDUSTRIES INCORPORATED**

100 Matheson Boulevard East, Mississauga

Ontario, Canada

www.ngen-global.com | info@ngen-global.com