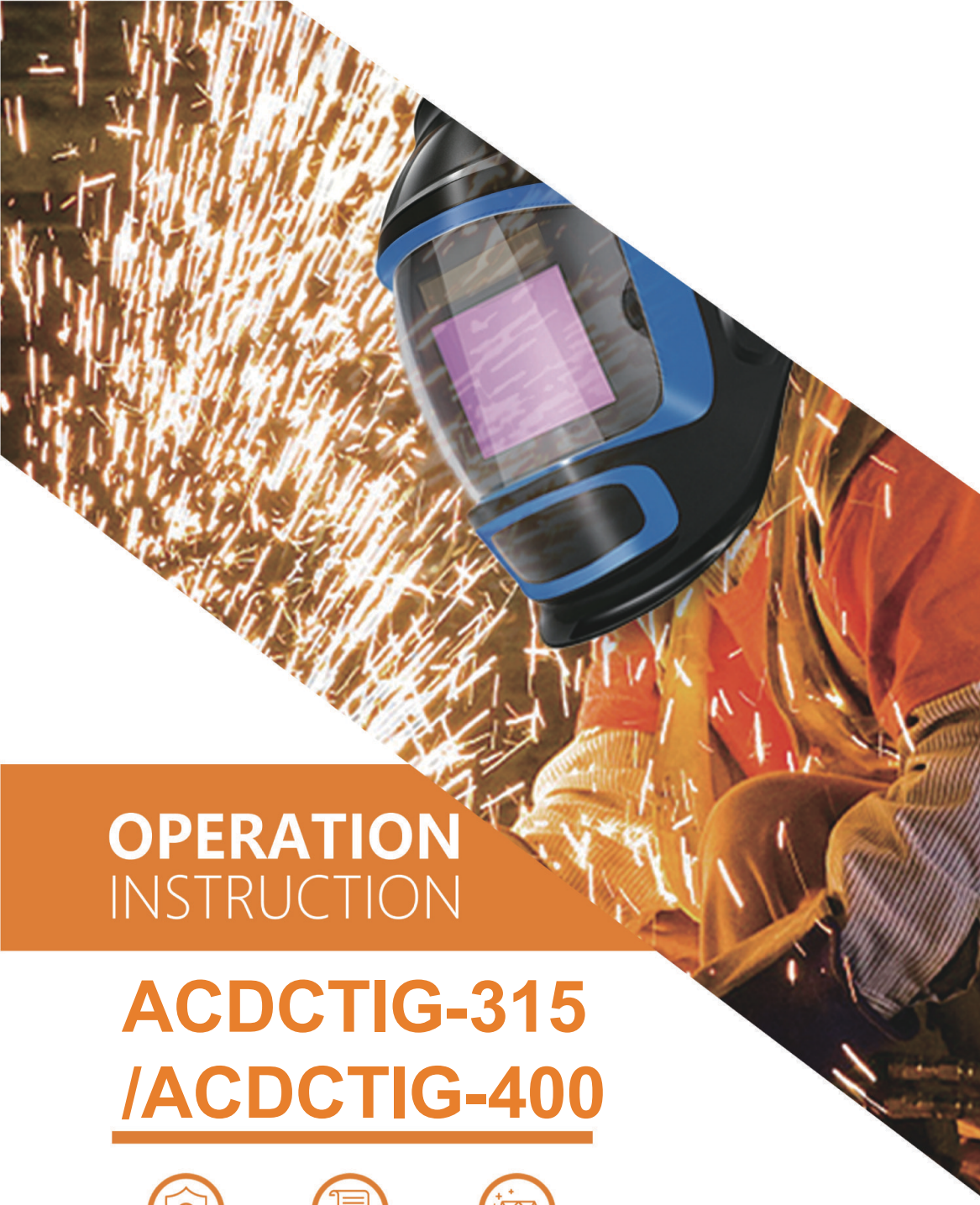

# OPERATION INSTRUCTION

# ACDCTIG-315 /ACDCTIG-400

SAFETY PROFESSION QUALITY

NGEN
EMPOWERING FUTURE

## Dear Customer,

Thank you for being our valued client. The welding machines are made from high-quality components, and each machine undergoes a series of advanced laboratory tests and field trials to ensure an exceptional welding experience and performance. For your safety, please carefully read and understand this manual before using the product. Your satisfaction is our top priority. If you have any questions or concerns, please do not hesitate to contact NGEN support.

# Contents

1.General.....2
2.General Description.....3
3.Technical Parameters.....4
4.Preparation of the Workstation.....6
5.Control Panels.....7
6.Welding.....11
7.Troubleshooting and Solutions.....11
8.Operating Instruction.....13
9.Maintenance Instructions.....13
10.Storage and Transport Instructions.....13

**WARNING!** Read these instructions before installing and commissioning the equipment.

# 1.General

**The equipment may only be started and operated after carefully reading this operating manual.**

**Damage to the equipment resulting from improper operation will lead to forfeiture of warranty rights.**

**Modification of the equipment and interference with its operation are prohibited.**

## ATTENTION

Welding can harm the safety of the operator and other persons nearby. Therefore, special precautions should be taken during welding. Before welding, read the occupational health and safety regulations in force at the workplace.

When electric welding using MMA and TIG methods, the following risks exist:
- Electric shock
- Negative effects of sparks on human eyes and skin
- Poisoning from fumes and gases
- Burns
- Noise

## Protection against electric shock:

- Connect the equipment to a technically efficient electrical installation with appropriate protection
- Assemble the current-carrying cables with the device switched off
- Do not use holders and power cords with damaged insulation
- In situations with a particularly high risk of electric shock (working in environments with high humidity and inside closed tanks), have an assistant support the welding work and supervise safety, using clothing and gloves with good insulating properties
- If you notice any irregularities, you should request a competent person to remove them
- It is forbidden to operate the equipment with the covers removed

## Protection against negative effects of the electric arc on eyes and human skin:

- Wear protective clothing (gloves, apron, leather shoes)
- Use a protective shield or helmet with appropriately selected filters
- Use protective screens made of non-combustible material and correctly select wall colors that absorb harmful radiation

## Protection against poisoning from fumes and gases generated during welding from the electrode coating insulation and metal evaporation:

- Use ventilation equipment at the workstation
- When working in confined spaces, blow with fresh air that absorb harmful radiation

## Protection against burns:

- Use ventilation equipment at the workstation
- When working in confined spaces, blow with fresh air that absorb harmful radiation

## Before starting the equipment:

- Check the condition of electrical and mechanical connections. It is forbidden to use holders and power cables with damaged insulation. Improper insulation of the holder and power cable may lead to electric shock.
- Ensure clean working conditions, ensure proper temperature, humidity, and ventilation at the workplace. Protect against atmospheric precipitation outside enclosed spaces.

## The welder operator should have the following competencies:

- Be competent in welding using manual electrode (MMA) and TIG methods
- Know and comply with the applicable health and safety regulations when performing welding work
- Use appropriate professional protective equipment: gloves, apron, rubber boots, protective screen or welding helmet with appropriate filters
- Be familiar with the content of these operating instructions and operate the welder for its intended purpose

Any maintenance on the equipment may only be carried out after disconnecting the plug from the power socket. When the equipment is connected to the power supply, it is not permitted to touch with bare hands or through damp clothing any elements that constitute the welding current circuit. When the equipment is connected to the power supply, it is forbidden to remove the outer covers. Maintenance and repair work may only be carried out by authorized personnel in accordance with the safety and operating conditions applicable to electrical equipment.enclosed spaces.

# 2.General Description

This welding machine is designed for manual welding using the Direct Current and coated electrodes (MMA) method, as well as for welding quality steels and non-ferrous metals in an inert gas shield (TIG). In the design and construction of the device, the latest developments in the field of PWM technology (Pulse Width Modulation) and IGBT modules (Insulated Gate Bipolar Transistors) were used, giving the welder small dimensions and low weight.

During MMA welding, the Arc Force and Hot Start functions are available. During TIG welding, it is possible to adjust the current upslope and downslope, pre-flow and post-flow gas, as well as pulse and AC current parameters. The device has a memory for 10 groups of parameter settings for TIG and MMA methods.

# 3.Technical Parameters

## 3.1Machine

| Model | ACDCTIG315 | ACDCTIG400 |
|---|---|---|
| Input Power Supply | AC 380V ±10% 50Hz/60HZ | AC 380V ±10% 50Hz/60HZ |
| Input Current | MMA：19.7 A； TIG：13.6 A | MMA：27.7 A； TIG：20.1 A |
| Max Power Consumption | MMA：13 KVA； TIG：9.1 KVA | MMA：18.2KVA； TIG：13.2KVA |
| Welding Current / Duty Cycle | MMA： 315 A / 40%<br>TIG： 315 A / 60% | MMA： 400 A / 60%<br>TIG：400 A / 60% |
| No-Load Voltage | 86V | 86V |
| Weight | 33 kg | 38 kg |
| Dimensions | 670 x 260 x 540 mm | 670 x 260 x 540 mm |
| Protection Class | IP21S | IP21S |

The protection class determines the extent to which the equipment is resistant to solid and water contamination. IP23 means that the device is designed for indoor work and is not suitable for use in the rain.

## 3.2 Technical Specifications

| Parameter | ACDCTIG315 | ACDCTIG400 |
|---|---|---|
| Arc Force | 0 – 100 A | 0 – 100 A |
| Hot Start | 0 – 100 A | 0 – 100 A |
| Pre-Flow Gas | 0 – 15 s | 0 – 15 s |
| Post-Flow Gas | 0 – 60 s | 0 – 60 s |
| Upslope Time | 0 – 10 s | 0 – 10 s |
| Downslope Time | 0 – 10 s | 0 – 10 s |
| Starting Current | 5 – 315 A | 5 – 400 A |
| Welding Current | MMA: 20-315A TIG:5-315A | MMA: 20-400A TIG:5-400A |

| | | |
|---|---|---|
| Base Current | 5 – 315 A | 5 – 400 A |
| Crater Current | 5 – 315A | 5 – 400 A |
| Pulse Frequency | 0.1-20 Hz | 0.1-20 Hz |
| Pulse Duty Cycle | 10 – 90 % | 10 – 90 % |
| AC Frequency | 20– 200 Hz | 20– 200 Hz |
| Cleaning Balance | 20– 70 % | 20– 70 % |
| Spot Welding Time | 0 – 10 s | 0 – 10 s |

## 3.3 Torch

| | |
|---|---|
| Type | WP26 |
| Gas Flow Rate | 10 – 20 l/min |
| Ignition Type | High Frequency Start |
| Length | 4 M |

## 4.Preparation of the Workstation

If the device was stored or transported at low temperatures, before starting work, the device should be brought to a suitable temperature.

## 4.1 MMA (Manual Metal Arc) Welding

The ends of the welding cables should be connected to sockets (1) and (5) on the front panel so that the polarity for the electrode is on the electrode holder. The polarity of the welding cable connection depends on the type of electrode used and is given on the electrode packaging. The ground clamp must be firmly connected to the material to be welded.

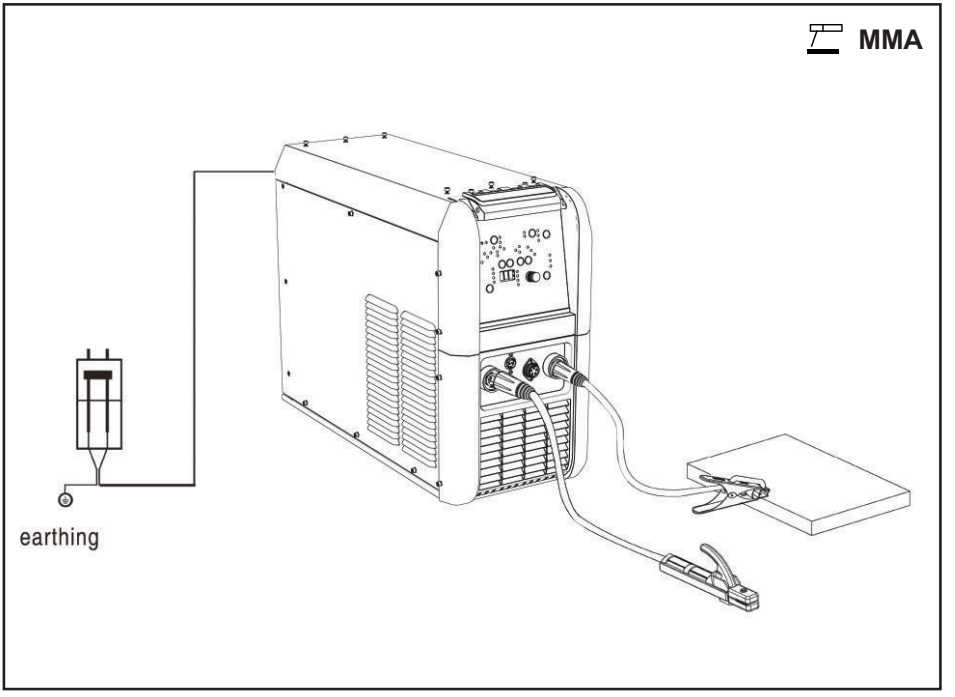


## 4.2 TIG (Tungsten Inert Gas) Welding

The torch should be connected to the negative socket (5), carefully screw the control plug of the holder onto socket (5), and connect the gas to the quick connector socket (3). The gas hose leading from the reducer should be connected to the gas inlet (8) located on the back of the housing. Connect the positive terminal of the power source (1) to the material to be welded using a cable with a ground clamp.

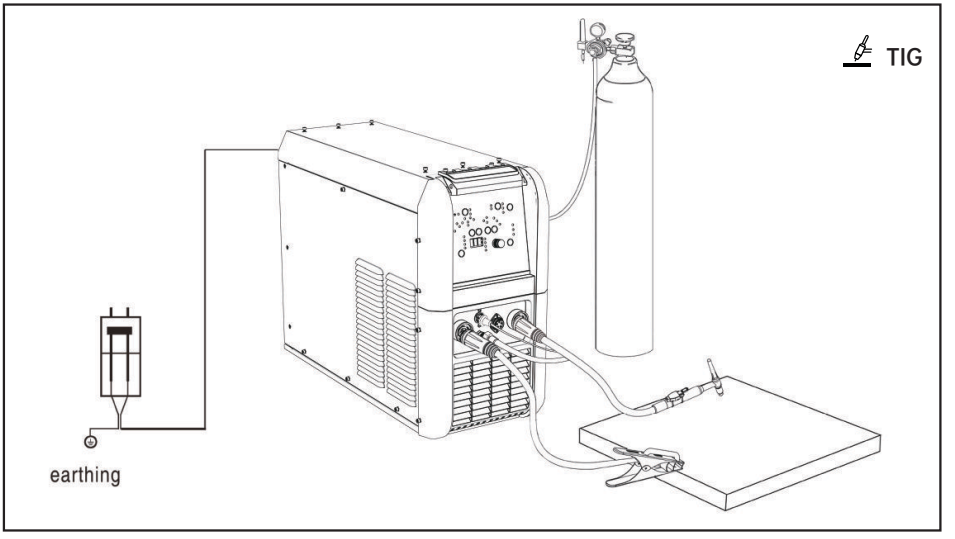

# 5.Control Panels

Front and Rear Panel

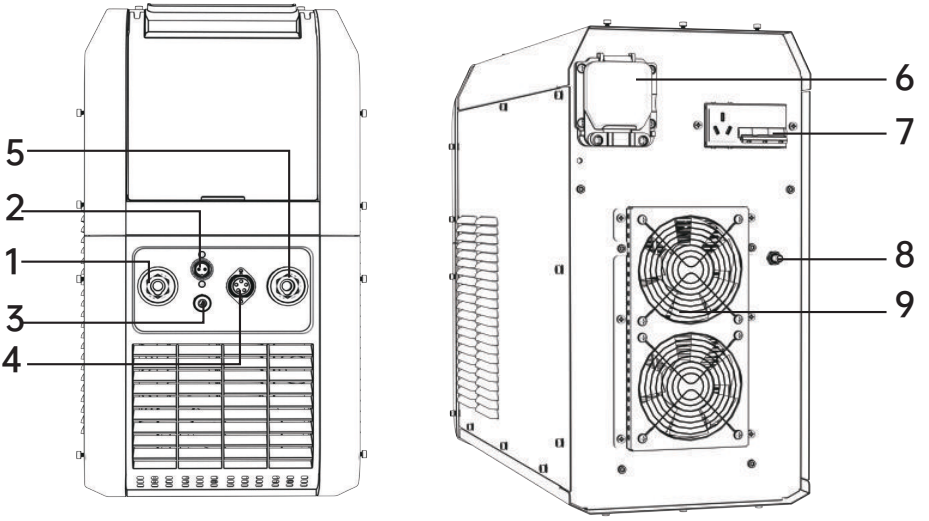


(1) Positive Socket
(2) Torch Switch Socket
(3) Gas Outlet Terminal
(4) Remote Control Socket
(5) Negative Socket
(6) Junction box
(7) Power Switch
(8) Water tank socket
(9) Exhaust fan

## 5.1 Control Panel

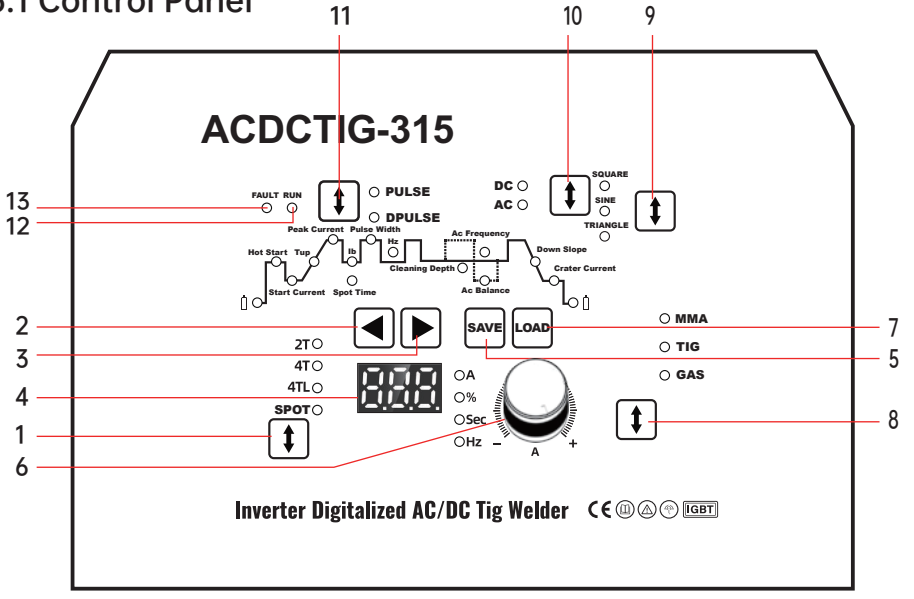

## 1. Operation Mode

Selects the weld start/stop logic:

(1) Standard (No Crater Control): Output current cuts off instantly upon trigger release without crater filling function. Suitable for general-purpose welding where crater quality is not critical.

(2) Slope (Crater On): Current ramps down gradually per the preset down-slope before cutting off, allowing for crater filling and preventing crater cracks.

(3) Repeat: Welding current alternates periodically between peak andbase values. Ideal for thin-sheet welding, providing precise heat input control and reduced burn-through risk.

(4) Spot Welding: Each torch trigger outputs a single pulse of preset duration. Suitable for tack welding and spot fixing of thin sheets.

## 2. Parameter Left Selection Key

Moves the parameter indicator to the left to select the parameterto be edited.

## 3. Parameter Right Selection Key

Moves the parameter indicator to the right to select the parameter to be edited.

## 4. Display Screen

Displays all parameter values. Any adjustment is automatically saved after3 seconds of inactivity, after which the display returns to the welding current interface.

## 5. Save Key

Saves the current welding parameter settings. The unit supports up to 10 independent sets of welding data, enabling fast switching between different workpieces or processes.

## 6. Parameter Adjustment Knob

Rotates to adjust the selected parameter value. Clockwise to increaase, counterclockwise to decrease.

## 7. Load Key

Recalls stored welding parameters. Short press to cycle through channels 1-10; once selected, the unit automatically loads all parameter settings of that channel.

## 8. Welding Process Selection Key

In TIG mode, press and hold for 3 seconds then release to switch to MMA welding.

(1) TIG (Tungsten Inert Gas): Suited for precision welding of stainless steel,carbon steel, copper, and similar materials.

(2) MMA (Manual Metal Arc): Suited for outdoor, heavy-duty, andstructural welding.

## 9. Waveform Selection Key

Selects the output current waveform from three options:

(1) Square Wave: Concentrated arc, deep penetration, higher noise. Suited for thick plates and applications requiring deep penetration.

(2) Sine Wave: Soft arc, low noise, smooth weld appearance. Suited for thin sheets and cosmetic welds.

(3) Triangle Wave: Balanced between square and sine wave characteristiCs. Suited for general-purpose welding.

## 10. AC/DC Selection Key

Selects between DC and AC welding output:

(1) DC Mode: Suited for stainless steel, carbon steel, titanium alloys, andd similar materials. Pulse function is available.

(2) AC Mode: Suited for aluminum, magnesium, and other non-ferrousmetals and alloys. AC Frequency, AC Balance, and Cleaning Depth parameters are adjustable. Both Pulse and Composite Pulse functicons are available.

## 11. Pulse Function Selection Key

Selects the pulse output mode:

(1) Pulse: Alternates welding current between peak and base at a set frequency and duty cycle. Suitable for heat-sensitive materials.Available in both DC and AC modes.

(2) Composite Pulse: Superimposes high-frequency sub-pulses on the main pulse for finer heat input control and improved weld bead formation. Available in AC mode only.

## 12. Operation Indicator

Indicates the Open Circuit Voltage (OCV) output status. When lit, the welding output terminals carry voltage， and the unit is ready for welding.

## 13. Alarm Indicator

Indicates abnormal operating conditions:

(1) Over-Temperature Protection (OTP): Internal temperature exceedsthe safe threshold. The welder automatically stops output. The indicator turns off once the unit cools down, and operation resumes automatically.

(2) Over-Current Protection (OCP): Welding current exceeds the allowable limit. The welder automatically cuts off output. Normal operation is restored after the short circuit or overload condition is ccleared.

## 5.2 Panel Parameter Description

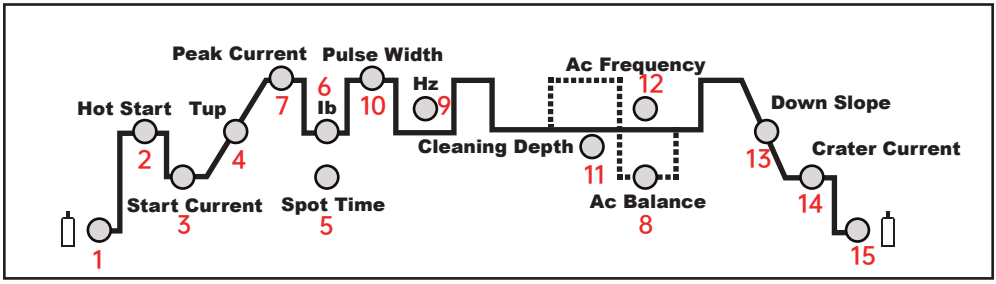


### 1. Pre-Flow Gas - Pre-Flow Gas Time

Description: Gas flow time before welding starts
Adjustment Range: 0 – 10 s

### 2. Hot Start - Arc Starting Current

Description: Current level at the moment of arc ignition
Adjustment Range: DC 10-400A / AC 50-400A

### 3. Start Current - Start Current

Description: Pre-set value for arc starting current when control is enabled
Adjustment Range: DC 5-400A / AC 20-400A

### 4. Up-Slope - Up-Slope Time

Description: When crater control is enabled, adjusts the timefor current to rise from start current to welding current
Adjustment Range: 0 – 10 s

### 5. Spot Time - Spot Welding Time

Description: Welding time duration in spot welding mode
Adjustment Range: 0 – 10 s

### 6. Base Current - Base Current

Description: When pulse mode is enabled, adjusts the low-level current of the pulse
Adjustment Range: DC 5-400A / AC 20-400A

### 7. Welding Current - Welding Current

Description: Adjusts welding current or pulse peak current
Adjustment Range: DC 5-400A / AC 20-400A

### 8. % - Duty Cycle

Description: When pulse mode is enabled, adjusts the ratio of peak current within the pulse cycle
Adjustment Range: 10-90 %

### 9. Pulse Frequency - Pulse Frequency

Description: When pulse mode is enabled, adjusts the pulse frequency value
Adjustment Range: 0.1-20 Hz

### 10. Cleaning Width - Cleaning Width

Description: Adjusts the cleaning width when welding in AC mode
Adjustment Range: 20-70 %

### 11. Cleaning Depth-Cleaning Depth

Description: Adjusts the cleaning depth when welding in AC mode
Adjustment Range: -50 ~ +50 %

### 12. AC Frequency--AC Frequency

Description: Adjusts the frequency of alternating current when welding in mode
Adjustment Range: 20-200 Hz

### 13. Down-Slope-Down-Slope Time

Description: When crater control is enabled, adjusts the timefor current to fall from welding current to crater current
Adjustment Range: 0 – 10 s

### 14. Crater Current-Crater Current

Description: Pre-set value for crater current when crater control is enabled
Adjustment Range: DC 5-400A / AC 20-400A

### 15. Post-Flow Gas - Post-Flow Gas Time

Description: Gas flow time after the welding cycle ends
Adjustment Range: 0 – 60 s

## 6.Welding

## MMA Welding

In this mode, welding current can be adjusted. After turning on the power, welding current can be adjusted directly. Turning the control knob will change the welding current.

## TIG Welding

The device is equipped with a high-frequency ionizer, allowing non-contact arc ignition. To ignite the arc in 2-Step mode, bring the electrode about 2 mm close to the welding material, then press the torch switch to activate the high-frequency ionizer. After correct arc ignition, press the button to weld. Release the button on the handle to start the current downslope phase and end the welding process. To ignite the arc in 4-Step mode, bring the electrode about 2 mm close to the material, then press the button on the torch handle to activate the ionizer. After correct ignition, you can release the button; releasing the button performs welding. To stop welding, press and release the button on the handle again.

## 7.Troubleshooting and Solutions

If a device failure occurs, before sending the machine for repair, check the basic fault list and try to eliminate it yourself. Any maintenance on the machine may only be carried out after disconnecting the plug from the power socket.

| Fault Phenomenon | Solution |
|---|---|
| Control panel not lit, fan not working, no output voltage | 1. Ensure the switch is in the ON position.<br>2. Check that the input power supply voltage is normal.<br>3. Remove the housing and check the connection of all electrical plugs inside the device. |
| Control panel lit, fan not working, no output voltage | 1. Check if the input power supply voltage is normal.<br>2. Unstable supply voltage has activated overvoltage protection. Turn off the device for 2-3 minutes, then turn it back on.<br>3. Short-term switching on and off of the switch triggered overvoltage protection. Turn off the device for 2-3 minutes, then turn it back on. |
| Control panel lit, fan running, but cannot ignite arc | Check the torch switch. If the torch switch is damaged or the cable is faulty, please replace it. |
| Control panel lit, fan working, alarm light on. display shows "E00" message | The machine is in thermal protection state. Please stop work for a few minutes, continue working after the alarm light goes off |
| Poor welding quality during MMA welding, electrode sticking to the material | 1. Check if the polarity of the welding cable connection corresponds to the electrode.<br>2. Check if the electrode is damp, replace the electrode.<br>3. The welder is powered by a generator set or a long extension cord with too small a cable cross-section. Please connect the machine directly to the power supply |
| Poor TIG welding quality | 1. Replace welding consumables, use high-quality tungsten electrode or high-purity shielding gas.<br>2. Check if the shielding gas output flow rate is sufficient.<br>3. Check the gas supply circuit for leaks.<br>4. Check if the gas pressure valve is normal. |

## Error Code:

| | |
|---|---|
| E00 | Overheating Protection Indication |

## 8.Operating Instruction

The machine should operate in an environment free of corrosive components and dust. Do not place the device in dusty places, near grinding machines, etc.Contamination of the internal control board, wires, and connections with dust and metal shavings can cause electrical short circuits, damaging the machine.
Avoid operation in conditions of high humidity, especially when there is dew on metal components.
For example, after bringing a cool device into a warm room where dew forms on metal components, wait for the dew to disappear. It is recommended that when using the machine outdoors, it should be placed under a roof to protect it from severe weather conditions.

## 9. Maintenance Instructions

As part of routine service, keep the welding machine clean, check the condition of external connections, and the condition of wires and cables.
Replace consumable parts regularly.
Regularly blow out the inside of the device with compressed air to remove dust and metal shavings from the control board, wires, and electrical connections.
A comprehensive review and inspection of electrical connections should be performed at least every six months, especially regarding:
-
Protection against electric shock
-
Insulation condition
-
Status of safety systems
-
Correct operation of the cooling system

## 10.Storage and Transport Instructions

The machine should be stored at temperatures from -10°C to 40°C, with relative humidity up to 80%, free from corrosive fumes and dust. Transport of the packaged equipment should take place in covered means of transport. During transport, secure the packaged equipment to prevent its movement and ensure its correct orientation.

EMPOWERING FUTURE

**NGEN INDUSTRIES INCORPORATED**

100 Matheson Boulevard East, Mississauga

Ontario, Canada

www.ngen-global.com | info@ngen-global.com