EMPOWERING FUTURE

Manual for AC/DC argon arc welding machine series

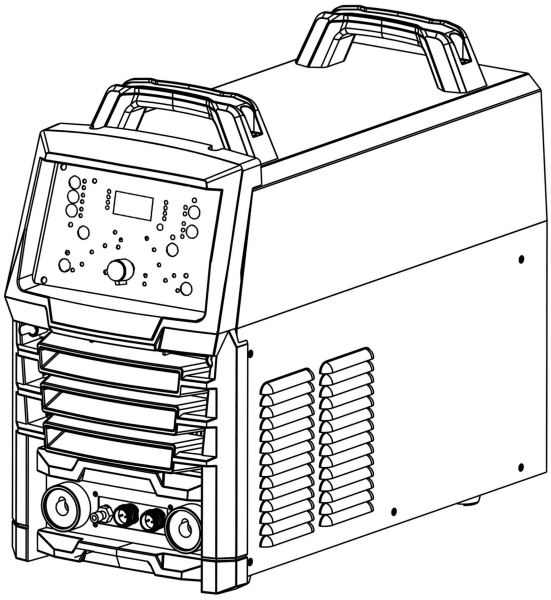

USER NOTICE 4

1、Overview 5

1.1、PURPOSE 5

2、Structure Principle and Characteristics 7

2.1 Schematic diagram of structure and function and its description..... 7

2.2 Main principles of welder..... 8

3、Main Technical Data 8 9

4、 Install 10

4.1、INSTALLATION WIRING OF WELDING MACHINE 11

4.2、OPERATION OF GAS FLOWMETER 11

5、Overhauling and Maintenance 11

5.1、ROUTINE INSPECTION 12

5.2、REGULAR MAINTENANCE 12

5.3、COMMON PROBLEMS AND ANALYSIS OF WELDING 12

6、Precautions 17

7、Accessories 18

■Stipulations for safe operation



- Please read this instruction carefully before operation and use it based on this instruction.
- This instruction should only be used for operation、 maintenance and repair for this machine.
- The machine functions, structure, and the contents of this operation instruction many be modified without prior notice.



- **Please submit this instruction or its copy to welding machine operator.**
- The installation, maintenance and repair should be made according to this instruction.



Caution:

- The Installation and maintenance should be carried by professional electrician.
- Electrical connection should not be conducted before the switch of the distribution box is turn off.
- Welding machine try to place in horizontal, dip angle shall not exceed 10 degree when tilt.



Warning **Electric shock can hurt or kill**

- Turn off the power switch of distribution box during wiring!
- Do not touch the exposed conductive parts.



Welding can cause fire or explosion!

- Splashing may ignite the nearby inflammables. The inflammables should be at least 10m away from the welding site.
- Do not let the splashing materials drop on the body or the clothes.



Welding fumes can do harm to human health.

- Do not imbibe the fumes generated during welding.
- Clean the oil stain on the workpiece.
- Keep the good ventilation of the air in the welding site.
- There should be fume exhausting equipment in the service position.



Weld light can hurt eyes and skin.

- Too strong weld light can hurt the eyes.
- The ultraviolet rays generated by the weld can damage the skin and eyes. Please wear labor protection clothes during welding.



Hot parts can burn the skin.

- Do not touch hot welding parts.
- Do not touch the welding cable or the electrode holder that is hot due to welding with bare hands.



Moving parts can cause injury.

- Do not insert the hand or thin materials into the fan guard.
- Close the previously opened casing during welding.



The damage of electromagnetic field

- Electromagnetic field is effect to cardiac pacemaker, the user installed cardiac pacemaker must ask the doctor.
- Effect of electromagnet filed to health is not confirmed and found out, can't exclude its negative effects to human body.
- Welding operator can reduce the dangers of electromagnetic field to human body according to follow methods:①、Bundle the welding cable and work piece cable together;②、Be sure not to surround cable on all or partial of the body;③、Do not stay in the middle of welding cable and ground(workpiece)cable, if welding cable in on the left, the ground cable should also on the left;④、Ground cable and welding cable should be short;⑤、Do not operate nearby the welding power.



THE WELDER CAN'T BE USED FOR PIPE THAW!

Continued table：

	• To prevent the eyes and the skin from being damaged, please follow the labor security and health regulations and wear necessary protective appliances！
	• The operation process should follow the relevant labor security safety rules!

Used for express refer to matters should be paid attention to.

Used for express refer to matters should be paid attention to.

To avoid fire caused by the damage of insulativity on welding machine, please observe the following provisions:

●Installation site of welding machine should make sure splash during welding or metal powder, metal crumb during other work not come into internal welding machine, if have found come into, must turn off all power, remove the shell, blow down by compressed air or clean by other way.

●Dust deposition will cause the insulating property decrease, even cause welding machine internal short and effect normal use, please send professional maintenance personnel on a regular basis according to the practical usage.

In order to prevent the gas cylinder from toppling, the gas regulator to rupture, etc., the following regulations must be observed:

* Dumping of gas cylinders can cause personal accidents

* There is high-pressure gas in the gas cylinder. Misuse may cause high-pressure gas to spray out and cause personal accidents.

● Please use gas cylinders correctly according to regulations.

● Please read the gas regulator instruction manual before use, and follow the regulations in the precautions.

● Use a dedicated gas cylinder holder to fix the gas cylinder. Do not place the gas cylinder in high temperature or direct sunlight.

● When opening the gas cylinder valve, keep your face away from the gas outlet.

● Do not put the welding torch on the gas cylinder, and the electrode cannot touch the gas cylinder

■ Installation place of welding machine

When the work site is relatively humid, and when operating on iron plates or iron frames, please install a leakage protector.

This machine does not require special fixing devices, but should be placed in a dry and ventilated place. Handle with care when moving, and keep away from high temperature, humidity, corrosive, toxic and harmful gases, metal dust, etc.

The distance between the machine and the gas welder, and the wall or gas partition or baffle should not be less than 200mm.

■ Power supply and distribution box for welding machine

The user should have a distribution box corresponding to the power supply, and should install an automatic air switch or other switches, and the ground wire should be firmly connected (the ground wire should be a cable of more than 12mm2) and reliable



To avoid personal accidents such as electric shock, burns, etc., the following matters should be observed:● The operation of electrical connection must be performed by professionals under the conditions of turning off the switch of the distribution box and ensuring safety.

● Do not touch with wet hands.

In order to prevent the fire caused by the overheating of the cable, the burning of the machine and the unstable arc:

● Please do not put heavy objects on the cable and contact with the cut part

● Please crimp the connection part of the cable reliably.

■ Knowledge of electromagnetic field

When welding current flows through the welding cable, an electromagnetic field is generated. Discussions about the effects of electromagnetic fields have been and will continue all over the world. So far, there is no concrete evidence that electromagnetic fields can cause serious harm to human health. However, research on the hazards of electromagnetic fields is still in progress. Before the final research conclusion is reached, we should still minimize exposure to electromagnetic fields when welding.

In order to reduce the electromagnetic field in the work area, we should follow:

● Make the cables close together by braiding or lightly touching them.

● Put all cables aside, away from the operator.

● Do not coil or hang the cable on your body.

● Keep the arc welder and cables as far away as possible from the operator according to the actual situation.

● The welding clamp should be as close to the welding place as possible.

Persons wearing pacemakers should stay away from the welding area or follow the doctor's advice.

Instructions

■ Inspection and preparation before operation

● Safety protection equipment.

In order to protect the exposed parts of the eyes and skin, special gloves and safety boots for welders should be worn.

● Prepare a protective mask with a light-shielding filter.

● Take ventilation measures to avoid inhaling toxic gases (CO, ozone, nitrogen oxide, etc.) generated during welding.

● Confirmation of connection completion.

● Please check again whether the whole machine has been connected according to the installation wiring diagram (see Figure 3 **and 4: Installation wiring diagram).**

● Load duration of the welding machine: the rated load duration is 60%, which means that within 10 minutes, 6 minutes will work at the rated welding current, and the other 4 minutes will not work.

● If it is used in excess of the rated load duration, the temperature rise will exceed the maximum allowable temperature of the welding machine, causing the performance of the welding machine to decrease or be damaged.

 **In order to use the welding machine correctly and safely, please pay attention to the following matters**

● Please confirm the rated specifications on the main nameplate of the machine before using it to avoid unreasonable use.

● Avoid overload use: Severe overload will burn the machine, even if the machine is not burned, it will shorten the service life of the welder.

● The connection between the welding machine terminal and the cable should be firm. If the connection is not good, it will cause local heating and burn the terminal. Pay attention to it.

● If the output cable is too long, the output current will decrease and the power loss will increase.

● When performing argon arc welding, select the appropriate shading filter according to the welding current and actual operation.

The welding power supply must be cut off before dust removal or maintenance, and the internal wiring of the motor or the components must not be damaged at will

● When using, pay attention to frequently checking the welding cable connector to ensure its reliable connection

1、Overview

1.1、USE

TIG/MMA-200 AC/DC welding machine adopts advanced pulse width modulation (PWM)technology and insulated gate bipolar transistor (IGBT)
to convert the power frequency to intermediate frequency,
thereby replacing the bulky in the traditional arc welding
machine with a small intermediate frequency transformer The power frequency (low frequency) transformer makes the machine have the advantages of small size, light weight, low noise, low power consumption and convenient portability. The welding machine is equipped with a digital panel, which has powerful functions and a wide range of parameter adjustment.

TIG/MMA-200 AC/DC is widely used in pipeline installation, mold repair, petrochemical,building decoration, food and refrigerating machine throat, auto repair, bicycle,handicraft and general manufacturing industries.

TIG/MMA-200 AC/DC can realize the following 5 welding methods through diffe rent combinations of the front panel selection switches:

●DC manual arc welding (DC MMA) ●DC argon arc welding (DC TIG)

●AC TIG welding (AC TIG) ●Pulse TIG welding (Pulse TIG)

●AC Pulse TIG (AC Pulse TIG)

1. DC manual arc welding can choose different polarity connections according to different electrodes.

2. DC argon arc welding generally adopts DC positive connection (workpiece connected to positive electrode, welding torch connected to negative electrode), which has the advantages of stable and concentrated arc, less damage to the tungsten electrode, relatively large welding current, and narrow and deep welds.

3. AC argon arc welding can be achieved by adjusting the front panel cleaning effect knob to meet the needs of cleaning the oxide film, but also to obtain the largest penetration and the smallest tungsten loss.

4. Pulse argon arc welding uses a base current to maintain the ionization channel of the main arc, and periodically adds a high peak pulse current of the same polarity to generate a pulse arc to melt the metal and control the droplet transfer.

5. AC pulse argon arc welding means that the pulse mode and the AC mode are mixed, and a more perfect welding process can be obtained.

2、Structural principles and characteristics

2.1、Structure function diagram and description

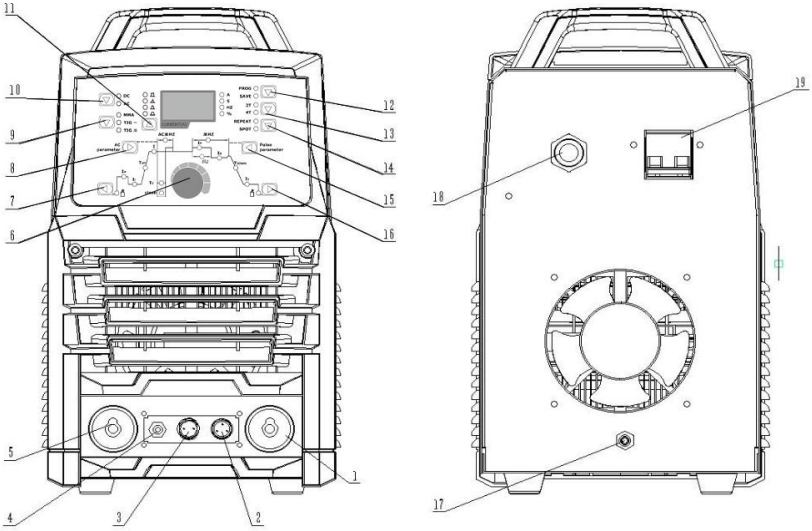

Schematic diagram of the whole machine function

(Taking TIG/MMA-200 AC/DC as an example)

(1)Quick connector: current output positive quick connector, which can be connected with manual welding tongs or grounding clamp;

(2) Remote control aviation socket: install remote control terminal;

(3) Welding gun switch aviation socket: install the switch joint of the argon arc welding gun;

(4) Solenoid valve output interface: connect to the gas connector of the argon arc welding gun;

(5) Quick connector: current output negative pole, connected to argon arc welding gun;

(6) Parameter size adjustment knob: when the function buttons select different functions, you can use this knob to adjust the parameter size;

(7) Welding parameter selection button: Through this button, you can select the front gas, hot arc starting, arc starting current, slow rise, welding current, slow drop, end arc current, rear gas and other functions;

(8) AC parameter selection button: through this button, you can select AC frequency, duty

cycle, pulse width cleaning and other functions;

(9) Welding mode selection button: This button can be used to select manual welding, DC argon arc welding, pulse argon arc welding and other functions;

(10)AC/DC selection button: Use this button to select DC or AC mode;

(11) Welding waveform selection button: Through this button, you can select four output waveform processes: square wave, triangle wave, trapezoidal wave, and sine wave according to the technological effect that the welding workpiece needs to achieve;

(12) Channel and save selection button: Through this button, the set parameters can be stored, which is convenient for direct call next time. This function can save ten parameter settings with codes 0-9;

(13) 2T/4T selection button: 2T/4T function can be selected through this button;

(14) Repeat/spot welding selection button: According to the workpiece material and process requirements, you can use this button to select the repeat and spot welding functions;

(15) Pulse parameter selection button: Use this button to adjust the peak current, base current, duty cycle and other parameters;

(16) Welding parameter selection button: Through this button, you can select the front gas, hot arc starting, arc starting current, slow rise, welding current, slow drop, end arc current, rear gas and other functions;

(17) Solenoid valve input interface: connected with argon gas cylinder；

(18) Power cord interface；

(19) switch；

2.2、The main principle of welding machine

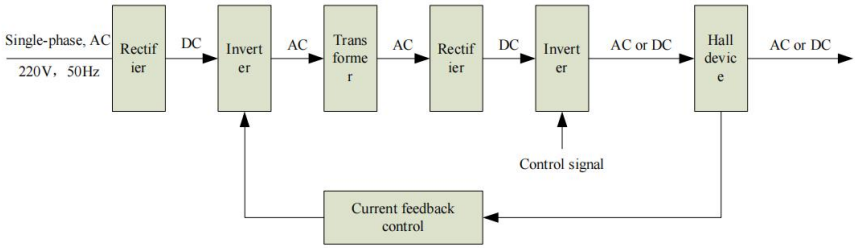

（ Taking TIG/MMA-200 AC/DC as an example）

3、**Main technical data**

Model / parameter	TIG/MMA 160AC/DC		TIG/MMA 200AC/DC		TIG/MMA 315AC/DC	
Input power	1~220V±10%，50/60Hz		1~220V±10%，50/60Hz		3~380V±10%，50/60Hz	
	TIG	MMA	TIG	MMA	TIG	MMA
Rated input current (A)	22	22	36	36	20	20
Rated input power (KW)	4.9	4.9	7.9	7.9	7.6	7.6
Welding current adjustment range (A)	5～160	30～120	5～200	30～160	5～315	30～270
Front air time adjustment range (S)	0-2		0-2		0-2	
Hot arc current adjustment range (A)	30~150		30~150		30～315	
Arcing current adjustment range (A)	5-200		5-200		5~315	
Climbing time adjustment range (S)	0~15		0~15		0~15	
AC frequency adjustment range (Hz)	15～150		15～150		15～250	
AC cleanup time duty cycle (%)	10-65		10-65		10~65	
AC cleaning current (A)	0-60		0-60		0~60	
Pulse peak current adjustment range (A)	25～160		25～200		25～315	
Pulse base current adjustment range (A)	5～140		5～180		5～295	
Pulse frequency adjustment range (Hz)	0.1~500		0.1-500		0.1~999	
Pulse peak current duty cycle (%)	15-80		15-80		15~80	
Slow down time adjustment range (S)	0.1~15		0.1~15		0.1~15	

Arc closing current adjustment range (A)	5-160		5-200		5-315	
Adjusting range of post-aspiration time (S)	0.1～60		0.1～60		0.1～60	
Spot welding time adjustment range (S)	0.1~9.99		0.1~9.99		0.1~9.99	
Temporary load rate (40℃, 10 minutes)	20% 160A	30% 120A	25% 200A	50% 160A	40% 315A	40% 270A
	100% 120A	100% 100A	100% 150A	100% 130A	100% 250A	100% 200A
Maximum no-load voltage (V)	65		68		68	
effectiveness	＞80％		＞80％		＞80％	
Power factor	0.68		0.68		0.92	
Enclosure rating	F		F		H	
Insulation class	IP21S		IP21S		IP21S	
Packing size (length × width × height) (mm)	510*257*387		555*330*428		630*338*520	

4、installation

4.1、Installation and wiring of welding machine

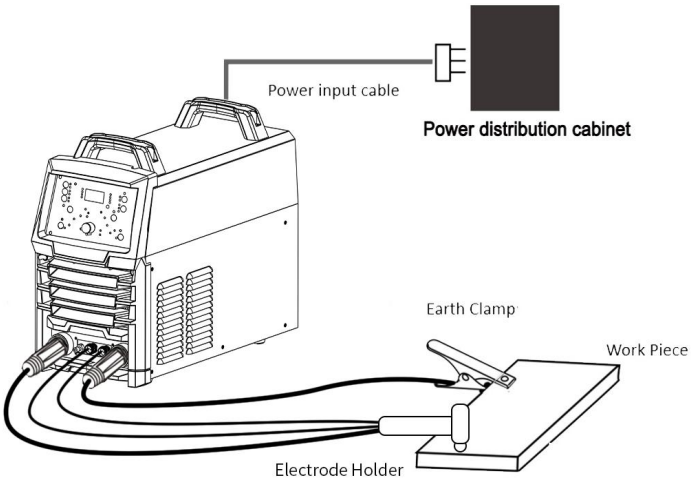

Wiring diagram

4.2、Gas flow meter operation

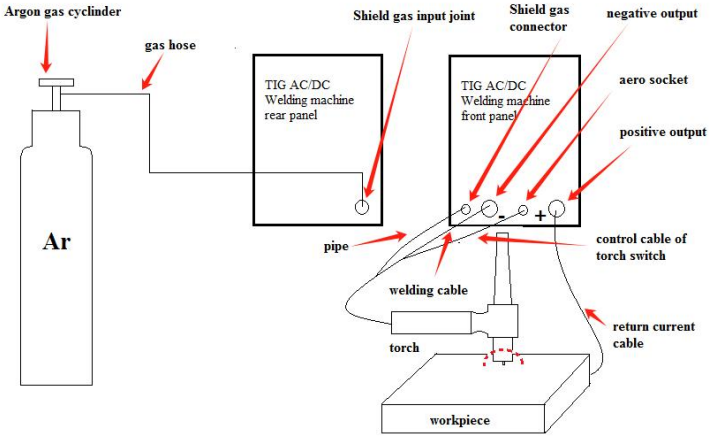

5、Overhaul and maintenance

5.1、Daily inspection

In order to give full play to the performance of this machine and ensure safe operation every day, daily maintenance is very critical.

During daily maintenance, focus on the wear, deformation, and blockage of various parts in the welding torch device, and check the following parts in turn. If necessary, some parts should be descaled, replaced, etc. In order to maintain the performance of the original machine when replacing parts, please be sure to use genuine parts of the company's welding machine。

 **Note**

► Unless there are special needs for the welding power supply, the maintenance must be carried out under the premise of cutting off the power supply of the distribution box and ensuring safety.

►If the above principles are not followed, it may cause serious accidents related to personal safety such as electric shock and burns.

5.2、Regular maintenance

In order to maintain the performance of this machine and to use it for many years, it is not enough to rely on daily maintenance.

Regular maintenance refers to in-depth and meticulous maintenance of the inside of the welding machine, including maintenance and purification of the internal welding power supply.

Under normal circumstances, a large amount of splash particles and oil dust will accumulate within half a year. If the factory environment is not good, there will be more splashes and dust inside the power supply. It is best to conduct an inspection every three months.

Implementation standards, see the next page for content. I hope that customers can add some maintenance items according to their own needs.。



note

► Unless there are special needs for the welding power supply, the maintenance must be carried out under the premise of cutting off the power supply of the distribution box and ensuring safety.

►If the above principles are not followed, it may cause serious accidents related to personal safety such as electric shock and burns.

5.3、Common welding problems and analysis

Common fault causes and troubleshooting methods

Serial number	Failure phenomenon	Failure cause analysis	Troubleshooting method
1	The fan does not turn	The fan is broken	Replace the fan
		The connecting wire falls off (disconnected)	Identify the disconnection and connect reliably
2	No ignition high frequency	Torch switch is broken	Replace the torch switch
		The main circuit board is broken	Replace the main circuit board
		The connecting wire falls off (disconnected)	Identify the disconnection and connect reliably
3	No argon output	No argon input	Check the flow meter and the gas pipe and restore the gas supply to the butt welder

		The main circuit board is broken	Replace the main circuit board
		The solenoid valve is broken	Replace the solenoid valve
		Airway blocked	Exclude foreign objects and clear the airway
4	Buzzer sounds	Caused by overheating inside the machine	It will return to normal after the temperature drops in standby
		Thermal relay is broken	Replace thermal relay
		Power supply voltage is too low	It can be restored after the voltage is normal
6	Panel knob adjustment does not work	Corresponding potentiometer is broken	Replace the potentiometer
		The main control board is broken	Replace the main control board
		The main circuit board is broken	Replace the main circuit board
7	Insufficient arc ignition	Wrong connection between welding gun and host	Check and correct according to the instructions
		Impure argon	Switch to 99.99% purity argon

		Bad tungsten electrode or damaged needle	Change to qualified tungsten electrode
8	Power trip	Power on for the first time after a long time (more than two days) power failure	Non-faulty, the filter capacitor of the main circuit of the power supply is charged and causes a trip, re-close the main power switch
9	Tungsten	(1) The tungsten electrode directly contacts the weldment (2) Tungsten electrode melting	(1) Using high-frequency arc ignition (2) Reduce the welding current or increase the diameter of the tungsten electrode (3) Replace the cracked tungsten electrode

10	Poor gas protection	The purity of argon is not high	(1) Use argon with a purity of 99.99% (2) Sufficient lag time for stopping the gas (3) Do a good job of cleaning up before welding (4) Correctly select the shielding gas flow (5) Increase nozzle size, electrode extension length, etc.

11	Tungsten loss	(1) The protection is not good, the tungsten electrode is oxidized (2) The polarity of the gun and the welding machine is reversed (3) The chuck is overheated (4) The diameter of the tungsten electrode is too small (5) The tungsten electrode is oxidized when welding is stopped	(1) Clean the nozzle, shorten the nozzle distance, and appropriately increase the argon flow (2) Change the connection of welding gun and welding machine output (3) Increase the diameter of the chuck (4) Increase the diameter of the tungsten electrode (5) Polish the tungsten electrode and exchange the chuck
12	Other		Please contact the manufacturer/supplier



Check the above procedures must pay attention to safety, to prevent electric shock!

6、**Precautions**

► Check the tungsten needles frequently, and replace them in time if they are severely worn, so as not to stick to the welding wire during use, which will affect the success rate of arc starting and the welding effect.

► During welding, the welding torch cable, especially the transition between the gun handle and the cable, should not be excessively bent, and the bending radius should not be less than 200mm.

► The body of the welding torch cannot be placed on the workpiece that has just been welded to avoid scalding.

► If the welding machine is not used for a long time (especially in places with high humidity or rainy season), unload the remaining welding wire from the wire feeder and put it in an oven or dry place for proper storage.

► If the welding machine is used outdoors, take measures to prevent rain and wind.

► During trial welding, the operator should stay upwind as much as possible, and do not operate at the smoke.

► Exhaust measures should be taken in the indoor welding area (or workstation).

► Often use #202 silicone oil to spray the nozzle cavity and tungsten needle, and remove the spatter accumulated in the cavity at any time, so that the shielding gas is sprayed out in a laminar flow to ensure the quality of the weld.

► Since gas shielded welding is open arc welding, and the arc is particularly strong, in order to protect your eyes, please choose deeper goggles.

► When welding, the shielding gas flow should not be too large or too small. If it is too large, it will not form a laminar flow for protection, but will destroy the molten pool. If it is too small, it will form turbulent flow and affect the quality of the weld. Generally, 8~15L/min is appropriate.

7、Accessories

Number	Description	Quantity	Note
1	TIG Welder	1	
2	TIG Torch	1	
3	Earth Clamp	1	
4	User Manual	1	
Need to support the use of accessories - wearing parts			
5	Φ 2.0 * 150 mm Tungsten needle	1	
6	Gas hose	3m	

NOTES: A: Fragile items are not covered by the warranty; B:All above mentioned are based on the ordering contact unless otherwise agreed by the parties.