

OPERATION INSTRUCTION

TIG200

SAFETY PROFESSION QUALITY

NGEN
EMPOWERING FUTURE

PREFACE

Dear User,
Thank you very much for choosing our product. The welding machine is built with high-quality components. Each unit has passed multiple industry-leading laboratory tests to deliver excellent welding experience and performance. For your safety, please read and fully understand this manual before operation. Your satisfaction is our top priority. Should you have any questions or requirements, please feel free to contact NGEN for support.

User Manual
Version: V1.1
Code: UNT-GC-TIG200-SM-02-A0

Disclaimer:

1. Unless otherwise agreed in writing, this manual serves only as an operation guide. Its contents shall not constitute any express or implied warranty.
2. Our company reserves the right to update manual contents irregularly for product upgrades without prior notice.
3. Reproduction, reprinting or dissemination of any content from this manual is strictly prohibited without written authorization from our company.

*Pictures in this manual are for reference only. In case of inconsistency between pictures and actual product, the actual product shall prevail.

TABLE OF CONTENTS

SAETY ---- 03

1. GENERAL DESCRIPTION ---- 05

1.1 Model coding ---- 05

1.2 Technical parameters ---- 05

1.3 Size and weight ---- 06

1.4 Connection method ---- 06

1.5 Function and featurs ---- 07

1.6 System characteristics ---- 08

2. INSTALLATION AND CONNECTION ---- 09

2.1 Installation requiremen ---- 09

3. OPERATION ---- 10

3.1 Panel functions ---- 10

3.2 Panel functions ---- 11

3.3 Notes for TIG operation ---- 12

3.4 Notes for MMA operation ---- 12

4. MAINTENANCE ---- 13

4.1 Daily maintenance ---- 13

4.2 Periodic check ---- 13

5. TROUBLESHOOTING ---- 15

SAFETY



Beware of electric shock!

- Install grounding device according to application standard.
- Do not touch live parts with naked skin, wet gloves or wet clothes.
- Be sure you are insulated from ground and workpiece.
- Cover the cover plate of the machine before power on to avoid an electric shock.
- Confirm the safety of your working position.



Beware of fire hazard!

- Please install the machine on non-combustible materials to avoid a fire.
- Make ensure there are no inflammables near the welding position to avoid a fire.



Beware of explosion!

- Do not install the machine in an environment with explosive gas to avoid an explosion.

Replacing the components can be dangerous.

- Only professionals can replace the components of the machine.
- Make sure there are no foreign bodies such as wire leads, screws, gaskets and metal bars falling into the machine inside when replacing the components.
- Make sure the connecting wires inside the machine are correctly connected after replacing the PCBs, and then the machine can be run. Otherwise, there is a risk of damage to property.

Carrying or moving the machine can be dangerous.

- Cut the input power off via the switching box before moving the welding machine.
- The handle can only be used for moving the welding machine by hand in short distance, and it cannot be used for lifting. Otherwise, personal injury or property damage may be caused by a drop.
- Make sure that the flying rings are tightened, and that the machine enclosure and cover are fixed when moving the welding machine with a crane,
- Two lifting belts should be used when lifting the welding machine, and the angle formed by the lifting belt and the vertical should be smaller than 15°.
- Do not apply any stress on the operation panel and cover when moving the welding machine. Otherwise, personal injury or property damage may be caused by a drop.
- Do not install and run the welding machine when the machine is damaged or lacks any components. Otherwise, fire hazard or personal injury may be caused.

Precautions for operation



Smoke-may be harmful to your health!

- Keep your head away from the smoke to avoid inhalation of waste gas in welding.
- Keep the working environment well ventilated with exhaust or ventilation equipment when welding.

	**Arc radiation-may hurt your eyes and burn your skin!** ● Use proper mask and wear protective clothing to protect your eyes and body. ● Use proper mask or curtain to protect onlooker from being injured.
	**Magnetic field can make cardiac pacemaker a bit wonky.** ● People with cardiac pacemaker should consult the doctor before carrying out welding. ● Stay away from the power source to reduce the affect of magnetic filed.
	**Improper use and operation may result in a fire or an explosion.** ● Welding spark may result in a fire, so please make ensure there are no inflammables near the welding position, and pay attention to fire safety. ● Ensure there is fire extinguisher nearby, and make sure someone has been trained to operate the fire extinguisher. ● Do not cut closed container. ● Do not use this machine for pipe thawing.
	**Hot workpiece can cause severe scald.** ● Do not touch hot workpiece with bare hands. ● Cool the welding torch for a while after continuously working.
	**Excessive noise does great harm to people's hearing.** ● Wear ear covers or other hearing protectors when welding. ● Give warning to onlooker that noise may be potentially hazardous to hearing.
	**Moving parts may injure your body.** ● Please keep away from moving parts (like fan). ● Each door, panel, cover, baffle plate, and protective device the like should be closed and located correctly.
	**Seek professional support when trouble strikes.** ● When trouble strikes in installation and operation, please inspect according to related contents in this manual. ● If you still cannot understand fully, or you still cannot solve the problem, please contact the dealer to obtain professional support.

Precautions for discard

Pay attention to the following when discarding the welding machine:

- Burning the electrolytic capacitors in the main circuit or on the PCBs may cause an explosion.
- Burning the plastic parts such as the front panel may produce poisonous gas.
- Dispose it as industrial waste.

1. GENERAL DESCRIPTION

1.1 Model coding



Figure 1-1: Model coding

1.2 Technical parameters

Table 1-1: General technical parameters

	TIG200
Rated Input Power	AC220V ±15% 50Hz/60Hz
Rated Input Capacity（kVA）	6.8
Rated Input Current（A）	TIG:28 MMA:35
Rated Output Current/Voltage（A/V）	TIG:200A/18V MMA:180A/27.2V @220V
Rated Duty Circle（@40℃）	60%
No-load voltage (V)	DC62
Output Current Range（A）	TIG:10-200 MMA:20-180 @220V
Post-flow Time（s）	0--10
Arc Ignition Type	HF
Enclosure Protection Class	IP21S
Insulation Grade	F
Power Factor	0.73
Efficiency (%)	80

1.3 Size and weight

Table 1-2: Overall size and weight of the machine

Model	**TIG200**
Overall size (L*W*H)	395*153*301
Weight (Kg)	7

Figure 1-2: Appearance and size of the machine (Unit: mm)

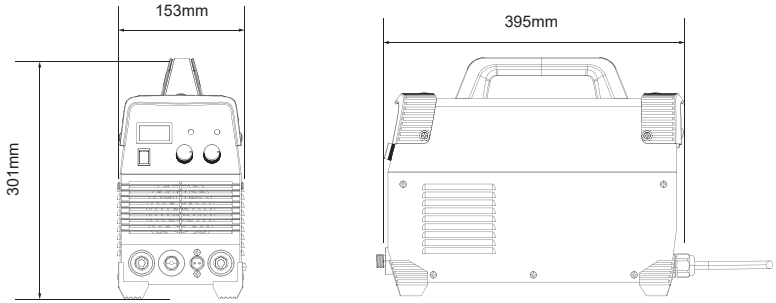

1.4 Connection method

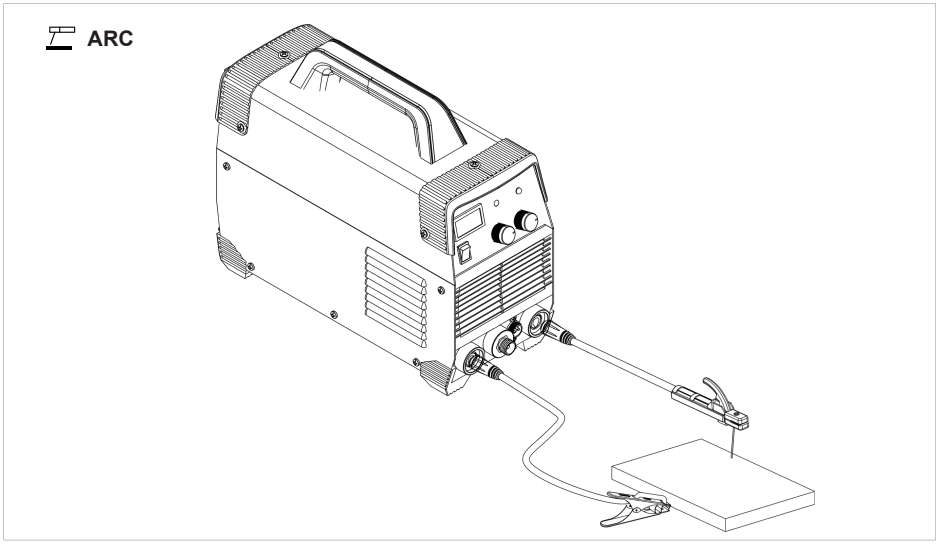

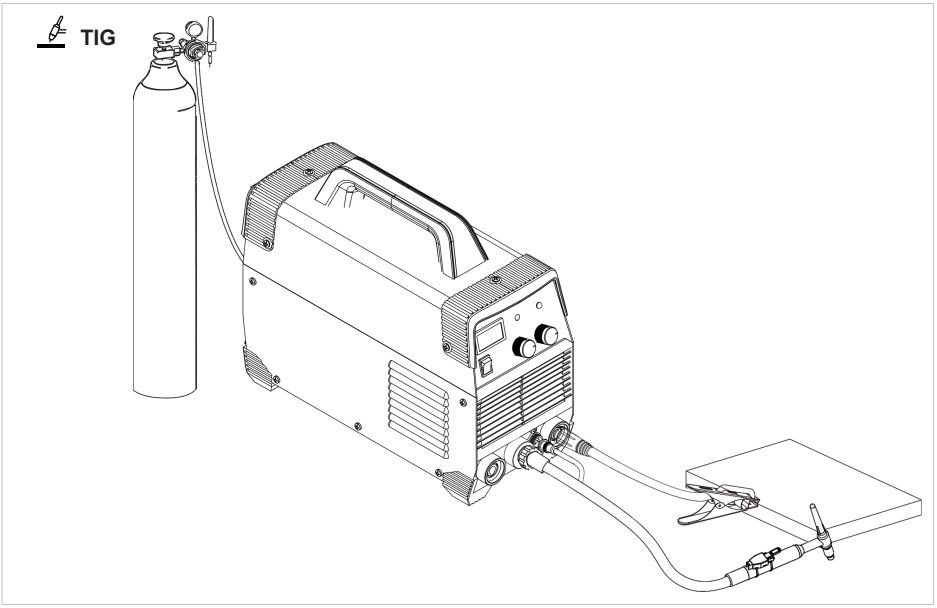

1.5 Function and featurs

It adopts PWM technology and high power switching element IGBT (discrete) to rectify AC220V/AC230V /AC240 (50Hz/60Hz) PF voltage to DC 310V--DC340V;after inverting it to 45KHz 325V + 15V, there is a voltage step-down and rectification again; stable welder current is obtained by output current feedback and adjustment.

Welder's weight and dimension, as well as losses are largely reduced due to the switch power supply inverter technology adopted; moreover, the machine's overall efficiency is improved more than 30%.

TIG250A is single usage argon arc welding machine.
TIG250A are both MMA and TIG welding machine.

Welder is of constant current external characteristic. Welding current will not be changed per arc length but being kept at a very stable level.

Machine panel is equipped with current regulation knob, post-flow knob,down-slope knob,frequency adjust knob, normal working indicator, abnormal working indicator, current digital meter.

Machine panel is of abundant functions, concise distribution and convenient operation.

1.6 System characteristics

1) Duty cycle

Rated duty circle means: Taking 10 min as a time cycle, the ratio of rated output time is taking in that time cycle.

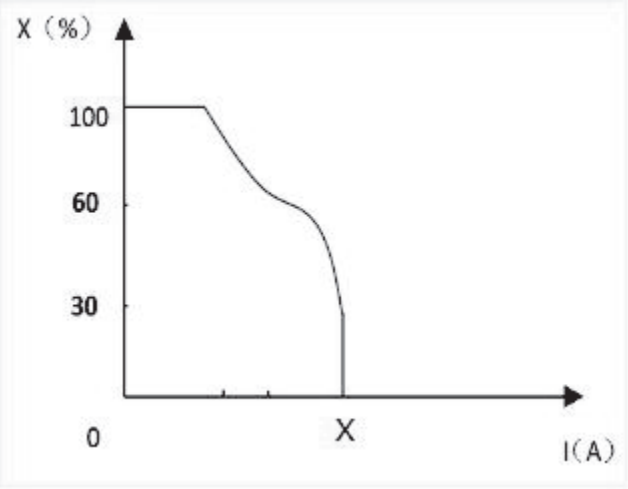

2) Output characteristics

Figure 1-5: Output characteristic curves

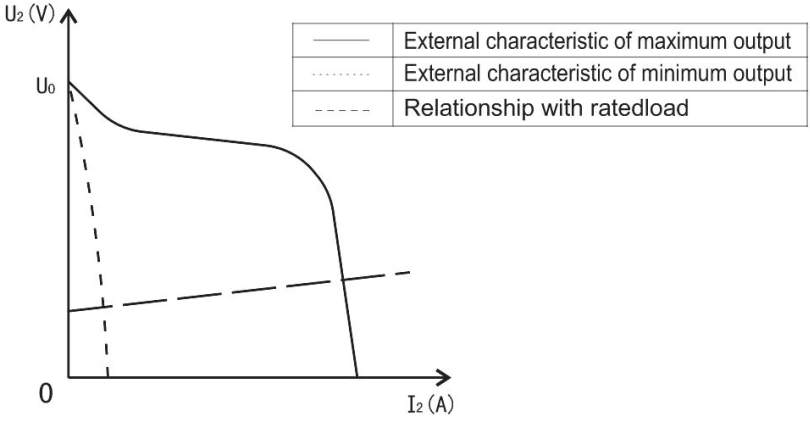

Figure 1-4: Duty cycle

2. INSTALLATION AND CONNECTION

2.1 Installation requirements

1) Connection of input cable

In order to ensure personal safety and avoid electric shock, please send the product power plug the grounding and wiring box grounding device,reliable grounding protection. A primary power supply cable is available for this cutting machine. Connect the power supply cable to the rated input power. The primary cable should be tightly connected to the correct socket to avoid oxidization. Check whether the voltage value varies in acceptable range with a multi-meter. The cross section of the leads used in the switching box should meet the requirements of the maximum input capacity of the machine.

2) Connection of output cable

Line disconnecting switch
Install a line disconnecting switch at each power supply, so that the power supply can be cut off immediately in case of an emergency. The disconnecting value of the switch should be equal to or greater than the continuous rating of the fuse. In addition, the switch should have the following feature:

The power is cut off when the switch is at " OFF " position.



Connection of torch
Connect the center plug on the TIG torch to the center socket of the power supply, and tighten It clockwise to avoid gas leakage.

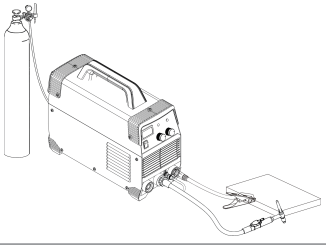

Connection of earth cable
Insert the quick plug on the earth cable into the output terminal"+"on the front panel of the machine, and tighten it clockwise.

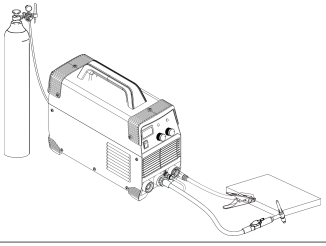

3. OPERATION

3.1 Panel functions of TIG200

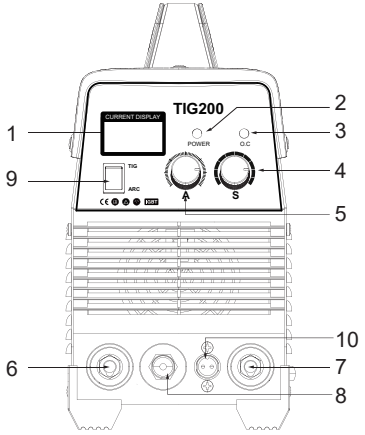

No.	Part name	Function
1	Digital	To display the current
2	Power	Indicator light when the power supply is energised
3	Overheating/ Overcurrent indicator	To indicate the temperature inside the machine is too high or machine under overheating protection status when it illuminates
4	Gas time control knob	Controls gas pre-gas and post-gas timing
5	Current control knob	To adjust the output current value
6	“-”Qutput terminal	To connect the TIG
7	“+”Qutput terminal	To connect the earth cable
8	Interface for torch trigger	To connect the control signal of TIG torch
9	ARC/TIG changeover switch	Up for TIG down for ARC
10	TIG gun switch	To connect the TIG torch

3.2 Panel functions of TIG200

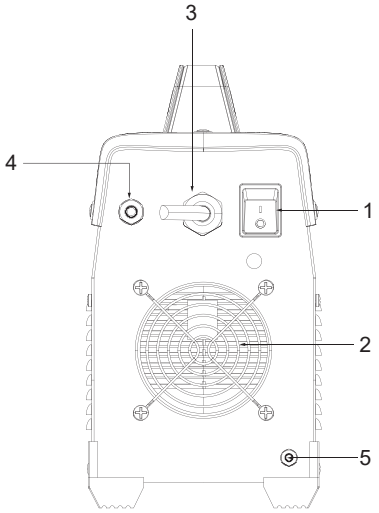

No.	Part name	Function
1	Power switch	To control the ON/OFF of the input power of the machine
2	Cooling fan	For heat dissipation through forced air cooling
3	Cable	For power supply input
4	Gas	Ar
5	⏚	Grounding

3.3 Notes for TIG operation

- The front panel of the power switch to "ON" position, the power indicator light, the cooling fan began to rotate.
- Open the argon bottle valve, observe the flow meter, according to the welding needs of the gas flow adjusted to the appropriate position.
- Press the switch on the welding gun, the solenoid valve starts, you will hear the sound of high-frequency spark discharge in the welding machine. At the same time, there is argon gas flow from the welding gun mouthout.
- Note: When welding for the first time, press and hold the switch on the gun for a few seconds before welding until all the air in the gas circuit is exhausted before starting welding.
- After stopping welding, argon gas will still flow out for a few seconds to ensure that the welded joints are protected before cooling. Therefore, after the arc is extinguished, keep the welding torch in the welding position for a few seconds.
- Therefore, after the arc is extinguished, please keep the welding torch in the welding position for a few seconds before removing the torch.
- According to the thickness of the welding workpiece, set the corresponding welding current.
- The tungsten electrode and the welded workpiece to maintain a distance of 2-4mm, press the gun switch, between the electrode of the welding gun and the workpiece to produce high-frequency discharge; in the arc ignition, the welder will be able to produce high-frequency discharge.
- After the arc is ignited, the high-frequency arc sparks in the welding machine will disappear immediately and the welding will start.

3.4 Notes for MMA operation

- The panel of the power supply to "ON" position, the machine cooling fan should start working.
- Set the function switch on the front panel at the downward position, which represents the manual welding mode, indicating that the welder can apply the welding rod to weld at this time.
- According to the thickness of the workpiece, workstation and process conditions, set the appropriate welding current.

Plate Thickness (mm)	Amount of Current (A)	Tungsten Diameter (mm)	Wire Diameter (mm)	Gas flow rate (L/min)		
				Stainless Steels	Copper	Titanium
0.3~0.5	10~40	1.0	1.0	4	6	6
0.5~ 1.0	20~40	1.0	1.0	4	6	6
1.0~2.0	40~70	1.6	1.6	4~6	8~ 10	6~8
2.0~3.0	80~ 130	2.0~2.5	2.0	8~ 10	10~ 12	8~ 10
3.0~4.0	120~ 170	2.5~3.0	2.5	10~ 12	10~ 15	10~ 12
4.0	160~200	3.0	3.0	10~ 14	12~ 18	12~ 14

WARNING

The power of the switching box and the cutting machine should be shut down before daily checking (except appearance checking without contacting the conductive body) to avoid personal injury accidents such as electric shock and burns.

Tips:

1) Daily checking is very important in keeping the high performance and safe operation of this cutting machine.
2) Do daily checking according to the table below, and clean or replace components when necessary.
3) In order to ensure the high performance of the machine, please choose components provided or recommended by dealer when replacing components.

Table 4-1: Daily checking of the cutting machine

Items	Checking requirements	Remarks
Front panel	Whether any of the components are damaged or loosely connected; Whether the output quick sockets are tightened; Whether the abnormity indicator illuminates.	If unqualified, check the interior of the machine, and tighten or replace the components.
Back panel	Whether the input power cable and buckle are in good condition; Whether the air intake is unobstructed.	
Cover	Whether the bolts are loosely connected.	If unqualified, tighten or replace the components.
Side plates	Whether the side plate is loosely fixed.	
Chassis	Whether the screws are loosely connected.	
Routine	Whether the machine enclosure has color fading or overheating problems; Whether the fan sounds normal when the machine is running; Whether there is abnormal smell, abnormal vibration or noise when the machine is running.	If abnormal, check the interior of the machine.

Table 4-2: Daily checking of the cables

Items	Checking requirements	Remarks
Earth cable	Whether the grounding wires (including workpiece GND wire and cutting machine GND wire) break off.	If unqualified, tighten or replace the components.
Cutting cable	Whether the insulating layer of the cable is worn, or the conductive part of the cable is exposed; Whether the cable is drawn by an external force; Whether the cable connected to the workpiece is well connected.	Use appropriate methods according to the work site situation to ensure safety and normal cutting.

4.2 Periodic check

WARNING

Periodic check should be carried out by qualified professionals to ensure safety. The power of the switching box and the cutting machine should be shut down before periodic check to avoid personal injury accidents such as electric shock and burns. Due to the discharge of capacitors, checking should be carried out 5 minutes after the machine is powered off.

Tips:

	**Safety** All maintenance and checking should be carry out after the power is completely cut off. Make sure the power plug of the machine is pulled out before uncovering the cutting machine. When the machine is powered on, keep hands, hair and tools away from the moving parts such as the fan to avoid personal injury or machine damage.
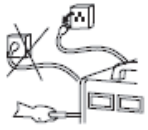	**Periodic check** Check periodically whether inner circuit connection is in good condition (esp. plugs). Tighten the loose connection. If there is oxidization, remove it with sandpaper and then reconnect. Check periodically whether the insulating layer of all cables is in good condition. If there is any dilapidation, rewrap it or replace it.
	**Beware of static** In order to protect the semiconductor components and PCBs from the static damage, please wear antistatic device or touch the metal part of the enclosure to remove static in advance before contacting the conductors and PCBs of the machine internal wiring.
	**Keep it dry** Avoid rain, water and vapor infiltrating the machine. If there is, dry it and check the insulation of the cutting machine (including that between the connections and that between the connection and the enclosure) with an ohmmeter. Only when there are no abnormal phenomena anymore, can the machine be used. Put the machine into the original packing in dry location if it is not to be used for a long time.
	**Pay attention to maintenance** Periodic check should be carried out to ensure the long-term normal use of the machine. Be careful when doing the periodic check, including the inspection and cleaning of the machine interior. Generally, periodic check should be carried out every 6 months, and it should be carried out every 3 months if the cutting environment is dusty or with heavy oily smoke.

	**Beware of corrosion** Please clean the plastic parts with neutral detergent.

5. TROUBLESHOOTING

The abnormity indicator on the front panel would illuminate in case of any failures inside the cutting machine.

Malfunction phenomena	Cause and solution
Turn on the machine, the power indicator illuminates, the control PCB keys do not function, and there is no response when pushing the torch trigger.	The cutting machine crashes: Shut down the machine, and restart it.
Turn on the machine, the power indicator illuminates, the control PCB keys work normally, but there is no response when pushing the torch trigger.	1) The LED1 on the main board is on: The control PCB is damaged. 2) The LED1 on the main board is off: Check the torch trigger and torch trigger wire.
Turn on the machine, the power indicator illuminates, and the fan works. When pushing the torch trigger, the solenoid valve functions, but there is no HF discharge rustling.	The arc ignition part fails: 1) The interelectrode distance of the discharge nozzle is too long. 2) There is leakage of the HF capacitor 102/10KV. 3) The relay is damaged. 4) The input voltage is too low.
Arc can not be ignited.	Argon gas not introduced

EMPOWERING FUTURE

NGEN INDUSTRIES INCORPORATED

100 Matheson Boulevard East, Mississauga

Ontario, Canada

www.ngen-global.com | info@ngen-global.com