

OPERATION
INSTRUCTION

TIG300/TIG400

SAFETY PROFESSION QUALITY

NGEN
EMPOWERING FUTURE

PREFACE

Dear User,
Thank you very much for choosing our product. The welding machine is built with high-quality components. Each unit has passed multiple industry-leading laboratory tests to deliver excellent welding experience and performance. For your safety, please read and fully understand this manual before operation. Your satisfaction is our top priority. Should you have any questions or requirements, please feel free to contact NGEN for support.

User Manual
Version: V1.1
Code: UNT-GC-TIG400-SM-01-A0

Disclaimer:
1. Unless otherwise agreed in writing, this manual serves only as an operation guide. Its contents shall not constitute any express or implied warranty.
2. Our company reserves the right to update manual contents irregularly for product upgrades without prior notice.
3. Reproduction, reprinting or dissemination of any content from this manual is strictly prohibited without written authorization from our company.

*Pictures in this manual are for reference only. In case of inconsistency between pictures and actual product, the actual product shall prevail.

TABLE OF CONTENTS

1. SAFETY INSTRUCTIONS..... 2

2. MAIN TECHNICAL PARAMETERS..... 6

3. INSTALLATION INSTRUCTIONS.....7

4. CONTROL PANEL DESCRIPTION..... 8

5. CONNECTION PROCEDURES.....10

6. OPERATING PRECAUTIONS.....11

7. MAINTENANCE.....12

8. TROUBLESHOOTING.....13

9. WELDING PARAMETER TABLE (REFERENCE).....14

1. SAFETY INSTRUCTIONS

Safety Instructions



Welding operations are hazardous and may cause injury to the operator and others. Adequate protective measures must be taken during welding. For details, please refer to the Operator Safety Guide complying with the manufacturer's safety accident prevention requirements and GB9448-2025.

1. Operator Qualification Requirements



- Operators must receive professional training before using this equipment, and use welding PPE approved by the national work safety supervision authority.
- Operators shall be qualified personnel holding a valid Metal Welding and Thermal Cutting Operation certificate.
- Be sure to cut off the power supply before equipment maintenance or repair.

2. Electric Shock Prevention



- Electric shock may cause severe injury or even death.
- Install the grounding device in strict accordance with specifications. Never touch live parts of the equipment with bare hands, wet gloves or wet clothing.
- Ensure good insulation protection between the operator and the ground/workpiece; the workplace must be safe and reliable.

3. Fume & Gas Protection



- Welding fumes and gases may be harmful to health.
- Keep your head away from fumes and gases during operation to avoid inhaling welding exhaust.
- The welding site shall maintain good ventilation via exhaust or ventilation equipment.

4. Arc Radiation Protection



- Arc radiation may damage eyes or burn the skin.
- When welding, cutting or monitoring welding/cutting operations, wear protective gear with sufficient shading to protect your eyes and body.
- Install protective screens around the workplace to prevent arc light or cutting spatter from injuring bystanders.

5. Fire and Explosion Prevention



- Improper operation may cause fire or explosion. Welding sparks can easily ignite combustibles. Flammable materials are strictly prohibited near the work area, and fire hazards must be closely monitored.
- Fire extinguishers shall be available on site, and trained personnel must be capable of operating them.
- Welding on sealed containers is strictly forbidden

6. High Temperature Protection



- Hot workpieces may cause severe burns. Do not touch hot workpieces directly with bare hands.
- When the welding torch is used continuously, cooling treatment is required for the torch.

7. Magnetic Field Warning



- Magnetic fields may interfere with cardiac pacemakers.
- Persons wearing cardiac pacemakers shall stay away from welding areas before consulting their doctors.

8. Fault Handling Specifications



- Seek professional assistance when the equipment malfunctions. If difficulties arise during installation or operation, refer to relevant contents in this manual.
- If you still cannot fully understand or the problem remains unsolved after reading, please contact the supplier service center for professional support.

9. Prohibited Applications



- It is strictly prohibited to use this welding power source for pipeline thawing operations.

10. Electromagnetic Interference Avoidance



- The user shall ensure that the cutting machine does not generate electromagnetic interference with other equipment in the environment. If interference occurs, corresponding shielding and protective measures must be taken.
- The cutting machine shall be connected to the mains supply as recommended by the manufacturer.
- Minimize the length of the cutting cable; route cables close together and close to the ground.
- Verify the safety of all metal components of the cutting assembly and connected parts.
- The yellow-green protective earth wire in the power cord must be grounded. The workpiece and earth clamp shall maintain good connection at all times.
- The user is responsible for interference issues caused by cutting operations.

11. Noise Generated During Welding & Cutting May Cause Hearing Damage



- To prevent noise hazards to yourself and others, wear specified protective equipment.

12. Lifting Precautions



- For products with shoulder straps or carrying handles, **lifting by shoulder straps or carrying handles is prohibited.
- When lifting the machine with a forklift, mount and secure it from the side of the machine to prevent tipping.
- When lifting the machine with a crane, attach the sling to the lifting lugs. The angle φ between the sling and vertical direction shall not exceed 15°.
- When lifting a welding machine equipped with a gas cylinder and wire feeder, remove these two devices from the power source first. When moving MIG welders on the ground, secure the gas cylinder firmly with straps or chains to prevent tipping and personal injury.
- If lifting a wire feeder via lifting lugs for welding, ensure secure mounting and insulation.

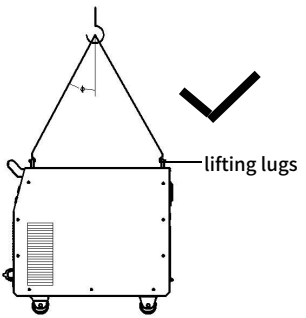

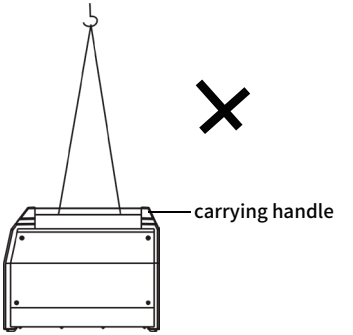

Selection Guide for Welding Filter Shade Numbers

Welding Method	Plate Thickness (mm)	Electrode Size (mm)	Arc Current (A)	Minimum Shade Number	Recommended Shade Number
Shielded Metal Arc Welding	—	＜2.5 2.5～＜4 4～6.4 ＞6.4	＜60 60～＜160 160～＜250 250～550	7 8 10 11	— 10 12 14
Gas Metal Arc Welding & Flux-cored Arc Welding	—	—	＜60 60～＜160 160～＜250 250～500	7 10 10 10	— 11 12 14
Gas Tungsten Arc Welding	—	—	＜50 50～＜150 150～500	8 8 10	10 12 14
Air Carbon Arc Cutting	—	—	＜150 150～500	10 11	12 14
Plasma Arc Welding	—	—	＜20 20～＜100 100～＜400 400～800	6 8 10 11	6～8 10 12 14
Plasma Arc Cutting	—	—	＜300 300～＜400 400～800	8 9 10	9 12 14
Torch Brazing (Hard)	—	—	—	—	3 或 4
Torch Soldering (Soft)	—	—	—	—	2
Carbon Arc Welding	—	—	—	—	14
Gas Welding	＜3 3～13 ＞13	—	—	—	4 or 5 5 or 6 6 or 8
Gas Cutting	＜25 25～150 ＞150	—	—	—	3 or 4 4 or 5 5 or 6

It is recommended to use suitable lenses that allow viewing of the welding zone, but the shade number shall not be lower than the minimum limit. For oxy-fuel welding or cutting where bright light is generated by the torch, filter lenses shall be used to absorb yellow or ultraviolet rays within the operator's field of view.

2. MAIN TECHNICAL PARAMETERS

Model	TIG300	TIG400
Input Power Supply	AC 380V +15% 50Hz/60Hz	AC 380V +15% 50Hz/60Hz
Maximum Input Capacity	MMA: 13.7A; TIG: 12.6 A	MMA: 13.3 KVA; TIG: 13.2KVA
Welding Current / Duty Cycle	MMA: 9 KVA; TIG: 8.3KVA	MMA: 320 A/60%; TIG: 400 A/60%
No-load Voltage	70V	70V
Welding Current Adjustment Range	MMA: 20-240A TIG:10-300A	MMA: 20-320A TIG:10-400A
Arc Force	0-100A	0-100A
Protection Class	IP21S	IP21S
Insulation Class	F	F

3. INSTALLATION INSTRUCTIONS

- Prepare required installation tools, such as wrench, slip-joint pliers, utility knife, etc.
- Make sure welder ventilation openings are not covered or blocked to avoid cooling-system failure.
- The yellow-green protective earth wire of power cable shall be reliably grounded.
- Verify supply voltage is within the allowable fluctuation range of the unit (±15%).

WARNING

All installation and wiring work for welding equipment must be performed with power disconnected.

CAUTION

It is recommended to use cables with specifications listed in the table below. Excessively long cables may degrade arc-ignition performance and other operating characteristics. If long-length cables are required, select cables with larger cross-sectional area to reduce voltage drop.

Input Voltage	AC380V,3-PH
Rated Current of Power Switch	63A
Input Cable Size	3.5mm²
Output Cable Size	35mm²

4. CONTROL PANEL DESCRIPTION

⚠CAUTION

Numbers correspond to physical markings on the control panel. Verify that components match the markings before operation.

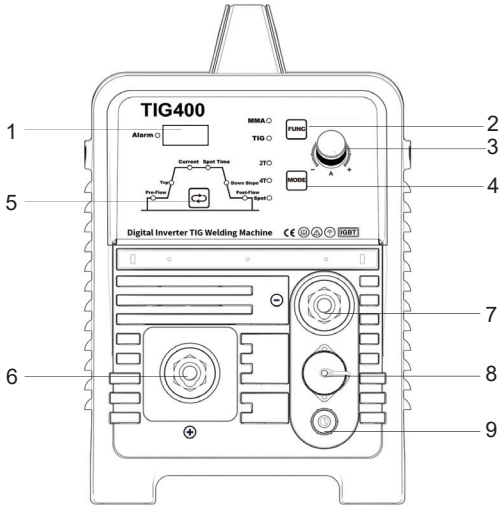

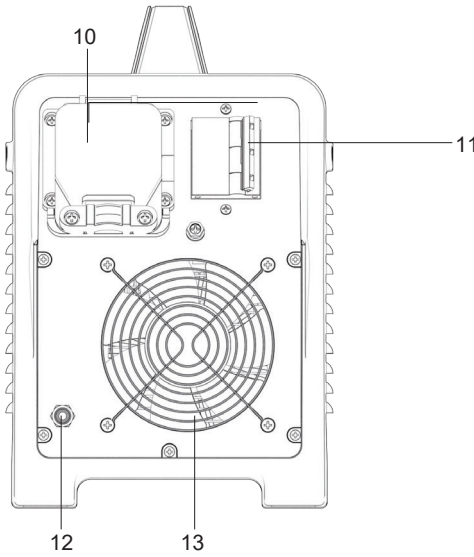

Front Panel

1. Display Screen
2. Function Selection
3. Current Adjustment Knob
4. Welding Mode
5. Parameter Adjustment Buttons
6. "+" Positive Output Terminal
7. "-" Negative Output Terminal
8. Torch Switch
9. Gas Outlet

Rear Panel

10. Power Switch
11. Terminal Box
12. Gas Shield
13. Fan

Note: The interface is for reference only. It may be modified due to subsequent product upgrades. Subject to the actual product.

Welding Mode and Parameter Matching

Welding Mode	Wire Diameter	Shielding Gas / Material	Operation Mode
MMA	-	Various Welding Electrodes	-
TIG	-	Argon Shielding	Lift-arc

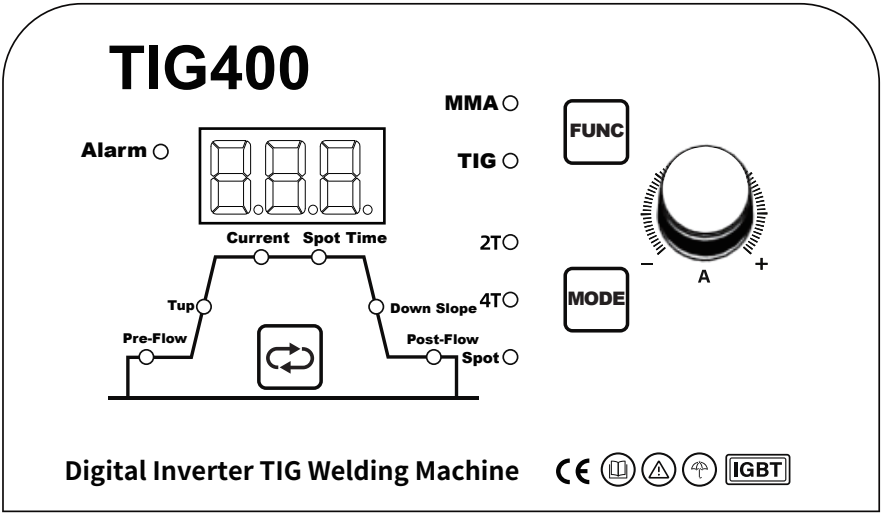

*Note: The interface is for reference only. It may be modified due to subsequent product upgrades. Please refer to the actual unit.

5. CONNECTION METHODS

5.1 WIRING DIAGRAM FOR WELDING MODES

Notice: This step must be performed by an electrician!

Connect the welder to a distribution box of appropriate capacity using a suitable power cable, refer to the input voltage and current in the technical specification table.
Do not apply incorrect voltage. Ensure power-supply voltage deviation stays within permitted range.

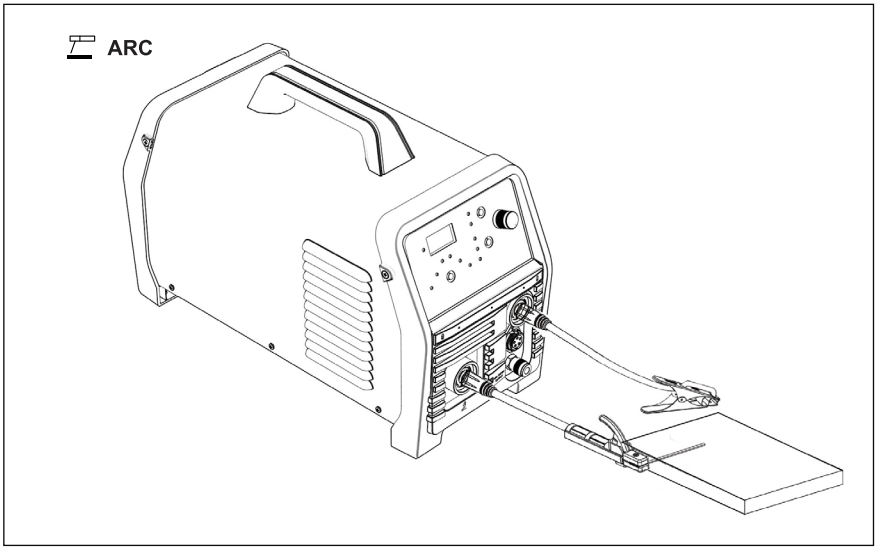

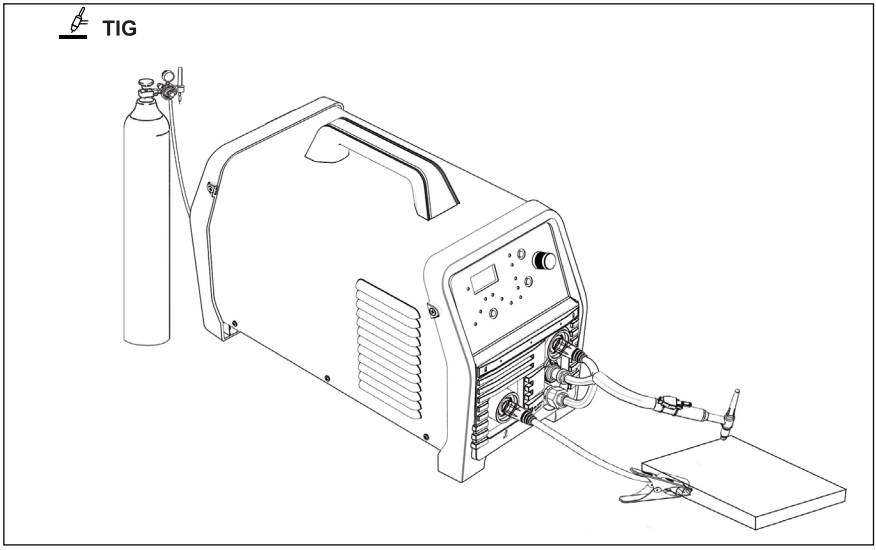

6. OPERATING PRECAUTIONS

6.1 WORKING ENVIRONMENT REQUIREMENTS

- Welding shall be carried out in a dry environment with relative humidity not exceeding 90%.
- Ambient operating temperature shall range from -10℃ to 40℃.
- Avoid outdoor-exposed welding. If outdoor operation is required, sun-shade and rain-proof measures must be taken to keep the unit dry. Do not place the equipment on damp ground or puddles.
- Do not operate the equipment in dusty surroundings or environments with corrosive chemical fumes.
- For gas-shielded welding, operate in conditions free of strong air flow to prevent shielding gas from being blown away.

6.2 VENTILATION REQUIREMENTS

- This unit draws high welding current during operation and requires efficient cooling. Natural ventilation alone cannot meet cooling demands, so the built-in cooling fan is critical for stable equipment performance.
- Operators shall keep louver air inlets unobstructed. Maintain a minimum clearance of 30 cm between the unit and surrounding objects.
- Adequate ventilation is essential for proper performance and service life of the equipment.

6.3 PROHIBITION OF OVER-VOLTAGE OPERATION

- Refer to the Main Technical Specifications for the permitted supply-voltage range. This unit features automatic voltage compensation to maintain stable output within the rated voltage range. Input voltage beyond the specified limits may damage internal components.

6.4 PROHIBITION OF OVERLOAD OPERATION

- Monitor the maximum load current (refer to corresponding duty cycle) during operation. Keep welding current below the maximum load current. Overload operation will drastically shorten service life and may cause permanent equipment damage.

6.5 OVER-HEAT PROTECTION

- In case of over-temperature caused by overload, the unit may stop unexpectedly and the over-heat indicator on the front panel will light up. Do not restart the machine. Let the internal fan run to cool down the unit. Resume welding only after internal temperature returns to normal and the over-heat indicator goes off.

6.6 ANTI-TIPPING AND EQUIPMENT MOVING GUIDELINES

- Place the welder on firm, level ground to prevent shifting or tipping during welding.
- Ensure support stands are securely and steadily positioned. For portable welders, disconnect power supply before moving. Never drag the unit by its power cable.

7. MAINTENANCE

WARNING

The following operations require sufficient professional electrical knowledge and full safety awareness. Operators must hold valid qualification certificates verifying relevant skills and knowledge. Disconnect the input power cable from mains before opening the equipment housing.

7.1 ROUTINE MAINTENANCE (BEFORE AND AFTER DAILY OPERATION)

- Wipe the unit housing and control panel with a dry cloth to remove dust and oil stains.
- Check that welding torch cable and earth cable connections are secure. Inspect insulation layers for damage or aging.
- Clear spatter from the torch nozzle. Check wear of the contact tip; replace it promptly if the bore exceeds wire diameter by 0.2 mm.
- Inspect shielding-gas hose for air leakage and tightness of fittings.

7.2 PERIODIC MAINTENANCE (EVERY 3 MONTHS)

- Disconnect power, open housing, and blow out internal dust with dry clean compressed air (0.2-0.3 MPa). Focus on IGBT modules, transformers and cooling fans.
- Inspect internal wiring (especially plugs and terminals). Tighten loose connections. Remove oxide layers with sandpaper and re-connect where needed.
- Verify smooth fan rotation and abnormal noise. Apply lithium-base grease for lubrication if necessary.
- Examine capacitors, resistors and other components for bulging, leakage or discoloration. Replace faulty parts with identical-specification components immediately.
- Periodically inspect cable insulation. Re-insulate or replace cables with damaged insulation.
- Check gas hoses for cracks and aging. Ensure sealing performance; replace hoses when required.

7.3 LONG-TERM STORAGE MAINTENANCE (FOR IDLE PERIODS OVER 1 MONTH)

- Thoroughly clean exterior and interior of equipment. Store welding torch, cables and accessories properly.
- Disconnect all connections. Place unit in original dust-proof moisture-proof packaging. Store in dry ventilated environment: temperature -10℃~40℃, relative humidity ≤70%.
- Power on for 30-minute warm-up every month to keep functions intact and prevent component aging.

7.4 GENERAL MAINTENANCE PROHIBITIONS

- Keep hands, hair and tools away from moving fan parts to avoid personal injury or equipment damage.
- Prevent rain, water and steam ingress. If water enters the unit, fully dry it and test insulation performance (between terminals and between terminals and housing). Do not use until no fault is confirmed.
- Use moderate compressed-air pressure; excessive pressure may damage small internal parts. Clean internal components daily under heavy smoke-polluted welding conditions.

8. TROUBLESHOOTING

WARNING

The following operations require sufficient professional electrical knowledge and full safety awareness. Operators must hold valid qualification certificates verifying relevant skills and knowledge. Disconnect the input power cable from mains before opening the equipment housing.

COMMON FAULT ANALYSIS & SOLUTIONS:

Fault Phenomenon	Solutions
E02	1. Check welding current and welding time, operate as specified in this manual. 2. Check fan operation during welding. If fan fails to run: verify fan 24 V power supply. If power supply is normal, replace fan; if abnormal, inspect fan power wiring. 3. Replace thermal-protection switch if it is damaged.
E04	Unstable input supply voltage. Restart the unit.
No response when welding-gun trigger is pressed; protection indicator light off	1. Check power-supply indicator and digital display. 2. Inspect trigger contact and overall welding-gun connections. 3. Verify wire-feeder connection.
Gas and wire feed on trigger actuation, but no welding output; protection indicator off	1. Check power-cable connections for good contact. 2. Confirm quick-connect plug is fully seated in matching socket. 3. Check wire-feeder connections are tight. 4. Inspect welding-gun for damage. 5. If all above are normal, internal control-board fault is suspected; contact qualified service personnel.
Output current present with gas flow on trigger actuation, but no wire feeding	1. Check for wire-feeder blockage or damage. 2. Inspect welding-gun contact tip for blockage or damage.
Normal welding via gun trigger, yet voltage cannot be adjusted; excessive open-circuit voltage	1. Check integrity of wire-feeder control cable. 2. If cable is intact, internal control-board fault is suspected; contact qualified service personnel.
Unstable welding current	1. Adjust wire-feeder arm pressure to proper range. 2. Confirm wire-feeder roller size matches filler-wire diameter. 3. Inspect contact-tip wear; replace and tighten when needed. 4. Check filler-wire quality. 5. Check welding-gun cable for excessive twisting. 6. Tighten loose quick-plug connections.
Poor weld-bead gas-shielding performance	1. Do not lift welding gun immediately upon weld stop; allow sufficient post-flow shielding-gas coverage. 2. Increase shielding-gas post-flow time. Contact our technical support if issue persists.
Large craters after welding	1. Select 4-T mode and finish crater filling at low welding current. 2. Change operation mode (activate synergic control if available).

9. WELDING PARAMETER TABLE (REFERENCE)

Welding current and voltage directly affect welding stability, weld quality and production efficiency. For optimal welding performance, adjust welding current and voltage according to wire diameter, metal-transfer mode and production requirements. Refer to the table below for parameter settings.

NOTE: These parameters are for reference only for other welding-process models.

MMA Welding Process Parameter Table

Electrode Type	Electrode Model / Grade	Connection Method	Welding Position	Electrode Diameter (mm)	Welding Current (A)
Structural-steel electrode-Acid electrode	E4313/ J421 E4303/ J422 E5003/ J502	DC Straight Polarity	Flat	2.5 3.2 4.0 5.0	50-90 90-140 150-210 210-270
			Horizontal	3.2 4.0	90-120 120-180
			Vertical	3.2 4.0	90-110 120-150
			Overhead	3.2 4.0	95-120 120-180
Structural-steel electrode-Basic electrode	E4315/ J427 E4316/ J426 E5015/ J507 E5016/ J506 E5018/ J506LMA E5015-G/ J507R E5015-G/ J507RH E5515-G/ J557 E6015-D1/ J607 E8015-G/ J807 E8515-G/ J857CrNi E9015-G/ J907	DC Reverse Polarity	Flat	2.5 3.2 4.0 5.0	50-90 80-125 140-180 180-240
			Horizontal	3.2 4.0	80-120 140-170
			Vertical	3.2 4.0	80-105 120-150
			Overhead	3.2 4.0	80-120 120-170

◆ DC Straight Polarity: Earth clamp connects to positive output terminal; electrode holder connects to negative output terminal.

◆ DC Reverse Polarity: Earth clamp connects to negative output terminal; electrode holder connects to positive output terminal.

TIG Welding Process Parameter Table

Reference Parameters for Flat-Butt TIG Welding of Different Materials

Plate Thickness (mm)	Welding Current (A)	Tungsten Electrode Diameter (mm)	Filler-wire Diameter (mm)	Gas Flow Rate (L/min)		
				Stainless Steel	Copper	Titanium
0.3-0.5	10-40	1	1	4	6	6
0.5-1.0	20-40	1	1	4	6	6
1.0-2.0	40-70	1.6	1.6	4-6	8-10	6-8
2.0-3.0	80-130	2.0-2.5	2	8-10	10-12	8-10
3.0-4.0	120-170	2.5-3.0	2.5	10-12	10-15	10-12
4	160-200	3	3	10-14	12-18	12-14

◆ Note: For plate thickness ≥4 mm, bevel preparation and multi-pass welding are recommended.

Cutting Process Parameter Table

Air Plasma Cutting Process Parameters

Workpiece Thickness	Cutting Torch:PT-31/S45 / Φ1.0 mm	Cutting Torch:AG60/S50 Φ1.2 mm
Cutting Torch Cutting Parameters:Air PressureCutting CurrentCutting Speed		
2 mm	4 kgf/cm²30 A100 cm/min	4 kgf/cm²40 A100 cm/min
6 mm	4 kgf/cm²40 A45 cm/min	4.5 kgf/cm²50 A50 cm/min
8 mm	4.5 kgf/cm²40 A30 cm/min	4.5 kgf/cm²55 A45 cm/min
10 mm	4.5 kgf/cm²40 A22 cm/min	4.5 kgf/cm²55 A40 cm/min
15 mm	5 kgf/cm²40 A18 cm/min	5 kgf/cm²55 A35 cm/min
20 mm	—	5 kgf/cm²55 A20 cm/min

◆ Note: The recommended air pressure for this cutter is 4-5.5 kgf/cm². The above values apply to automated cutting with standard-equipped torches. Parameters shall be adjusted accordingly for manual cutting, other torch/nozzle types or different workpiece thickness. Cutting performance is closely related to torch and consumables. For optimal results, use original-manufacturer torches and consumables, or high-quality aftermarket cutting consumables.

MIG/MAG Welding Process Parameter Table

I-Groove Butt Weld

—	Plate Thickness (mm)	Wire Diameter (mm)	Gap (mm)	Current (A)	Voltage (V)	Travel Speed (cm/min)	Stick-out (mm)	Gas Flow Rate (L/min)
Low-travel-speed condition	0.8	0.8, 0.9	0	60-70	16-16.5	50-60	10	10
	1	0.8, 0.9	0	75-85	17-17.5	50-60	10	10-15
	1.2	0.8, 0.9	0	80-90	16-16.5	50-60	10	10-15
	1.6	0.8, 0.9	0	95-105	17-18	45-50	10	10-15
	2	1.0, 1.2	0-0.5	110-120	18-19	45-50	10	10-15
	2.3	1.0, 1.2	0.5-1.0	120-130	19-19.5	45-50	10	10-15
	3.2	1.0, 1.2	1.0-1.2	140-150	20-21	45-50	10-15	10-15
	4.5	1.0, 1.2	1.0-1.5	160-180	22-23	45-50	15	15
High-travel-speed condition	0.8	0.8, 0.9	0	100	17	130	10	15
	1	0.8, 0.9	0	110	17.5	130	10	15
	1.2	0.8, 0.9	0	120	18.5	130	10	15
	1.6	1.0, 1.2	0	180	19.5	130	10	15
	2	1.0, 1.2	0	200	21	100	15	15
	2.3	1.0, 1.2	0	220	23	120	15	20
	3.2	1.2	0	260	26	120	15	20

Fillet Weld

Plate Thickness (mm)	Wire Diameter (mm)	Current (A)	Voltage (V)	Travel Speed (cm/min)	Stick-out (mm)	Gas Flow Rate (L/min)
1.6	0.8, 0.9	60-80	16-17	40-50	10	10
2.3	0.8, 0.9	80-100	19-20	40-55	10	10-15
3.2	1.0, 1.2	120-160	20-22	35-45	10-15	10-15
4.5	1.0, 1.2	150-180	21-23	30-40	10-15	20-25

MIG/MAG Welding Process Parameter Table

Flat-fillet T-Butt Joint

—	Plate Thickness (mm)	Wire Diameter (mm)	Torch Included Angle(°)	Current (A)	Voltage (V)	Travel Speed (cm/min)	Stick-out (mm)	Gas Flow Rate (L/min)
Low-travel-speed condition	1	0.8, 0.9	45	70-80	17-18	50-60	10	10-15
	1.2	0.9, 1.0	45	85-90	18-19	50-60	10	10-15
	1.6	1.0, 1.2	45	100-110	19-20	50-60	10	10-15
	2	1.0, 1.2	45	115-125	19-20	50-60	10	10-15
	2.3	1.0, 1.2	45	130-140	20-21	50-60	10	10-15
	3.2	1.0, 1.2	45	150-170	21-22	45-50	15	15-20
	4.5	1.0, 1.2	45	140-200	22-24	45-50	15	15-20
	6	1.2	45	230-260	24-27	45-50	20	15-20
	8.9	1.2, 1.6	50	270-380	29-35	45-50	25	20-25
	12	1.2, 1.6	50	400	32-36	35-40	25	20-25
High-travel-speed condition	1	0.8, 0.9	45	140	19-20	160	10	15
	1.2	0.8, 0.9	45	130-150	19-20	120	10	15
	1.6	1.0, 1.2	45	180	22-23	120	10	15-20
	2	1.2	45	210	24	120	15	20
	2.3	1.2	45	230	25	110	20	25
	3.2	1.2	45	270	27	110	20	25
	4.5	1.2	50	290	30	80	20	25
	6	1.2	50	310	33	70	25	25

Flat-fillet Lap Joint

—	Plate Thickness (mm)	Wire Diameter (mm)	Torch Included Angle(°)	Current (A)	Voltage (V)	Travel Speed (cm/min)	Stick-out (mm)	Gas Flow Rate (L/min)
Low-travel-speed condition	0.8	0.8, 0.9	10	60-70	16-17	40-45	10	10-15
	1.2	0.8, 0.9	30	80-90	18-19	45-50	10	10-15
	1.6	0.8, 0.9	30	90-100	19-20	45-50	10	10-15
	2.3	0.8, 0.9	47	100-130	20-21	45-50	10	10-15
		1.0,1.2	47	120-150				
	3.2	1.0, 1.2	47	150-180	20-22	35-45	10-15	20-25
	4.5	1.2	47	200-250	24-26	45-50	10-15	20-25
High-travel-speed condition	2.3-3.2	1.2	47	220	24	150	15	15
				300	26	250		

◆This manual has been carefully revised. Specifications are subject to change without prior notice!

EMPOWERING FUTURE

NGEN INDUSTRIES INCORPORATED

100 Matheson Boulevard East, Mississauga

Ontario, Canada

www.ngen-global.com | info@ngen-global.com